E12340

Connecting cable with socket

ADOAH040MSS0010C04

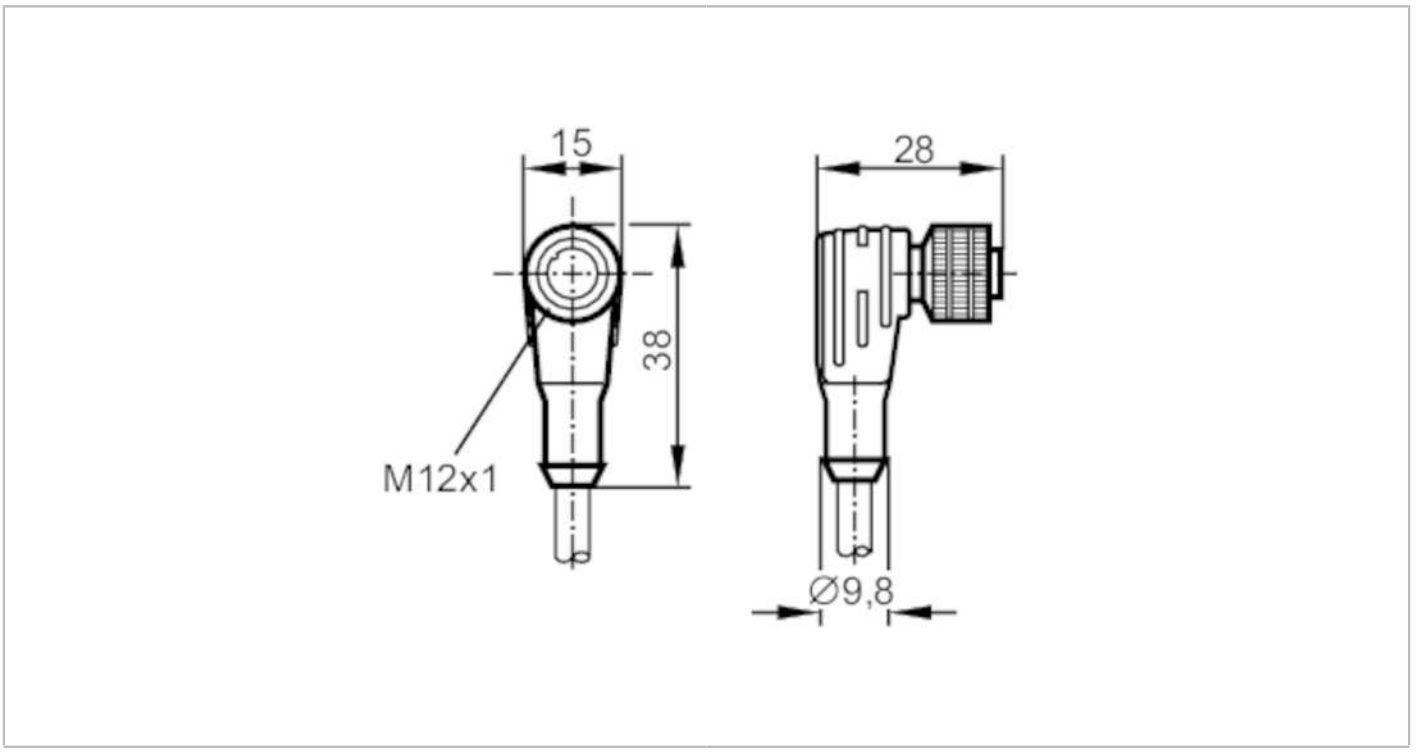

Application		
Special feature		Free from silicone; Halogen-free; Gold-plated contacts; Screened cable; Drag chain suitability
Free from silicone		yes
Electrical data		
Operating voltage	[V]	< 50 AC / < 60 DC
Protection class		III
Max. current load total	[A]	4
Operating conditions		
Ambient temperature	[°C]	-25...85
Note on ambient temperature		21 days: ...120
Protection		IP 67
Mechanical data		
Weight	[g]	512.7
Dimensions	[mm]	28 x 15 x 38
Materials		TPU
Moulded-body material		TPU
Material nut		diecast zinc
Drag chain suitability		yes
Drag chain suitability	bending radius	min. 10 x cable diameter
Remarks		
Pack quantity		1 pcs.

E12340

Connecting cable with socket

ADOAH040MSS0010C04

Electrical connection

Cable: 10 m, PUR, Halogen-free, black, Ø 5 mm, shielded; 4 x 0.34 mm² (42 x Ø 0.1 mm)

Electrical connection - socket

Connector: 1 x M12, angled; coding: A; Moulded body: TPU; Locking: diecast zinc; Contacts: gold-plated; Tightening torque: 0.7...0.9 Nm; Shielded connection cable: screen not connected



Connection

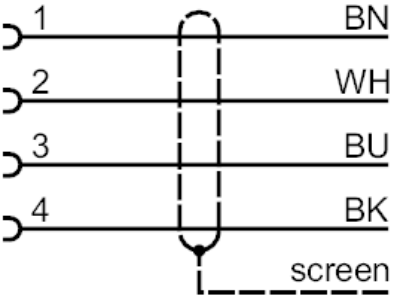

	Core colours :
BK =	black
BN =	brown
BU =	blue
WH =	white