THE INFORMATION CONTAINED IN THIS DRAWING IS THE SOLE PROPERTY OF L-COM, INC. ANY REPRODUCTION IN PART OR WHOLE WITHOUT THE WRITTEN PERMISSION OF L-COM, INC. IS PROHIBITED.

REVISIONS			
REV	DESCRIPTION	DATE	APPROVED
E	ECN 10838; REVISE UL STYLE TO 21551,ADD LSZH CBL CHARACTERISTICS TO DWG,NEW FORMAT	12/10/2020	M.BLACKWOOD

P/N	LENGTH	
	FEET	METERS
CTLDVIDMMLZ-3	3.0	.92
CTLDVIDMMLZ-5	5.0	1.52
CTLDVIDMMLZ-10	10.0	3.05
CTLDVIDMMLZ-15	15.0	4.57

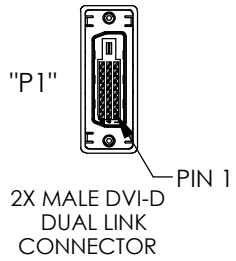

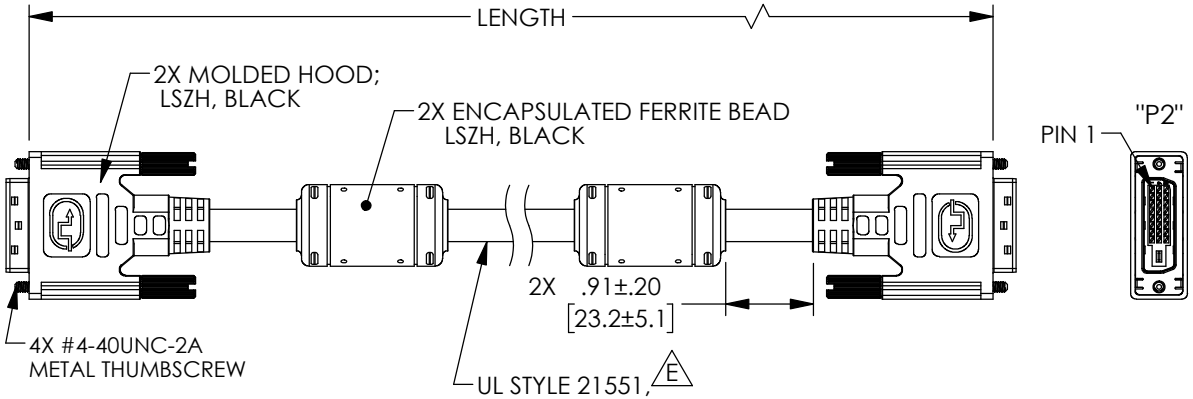

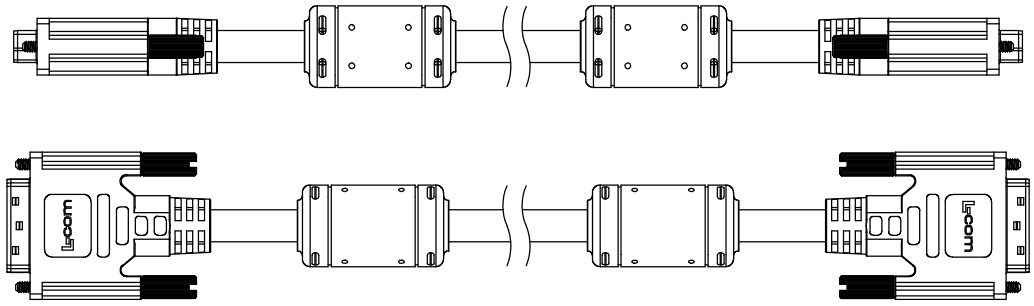

"P1" WIRING MAP "P2"

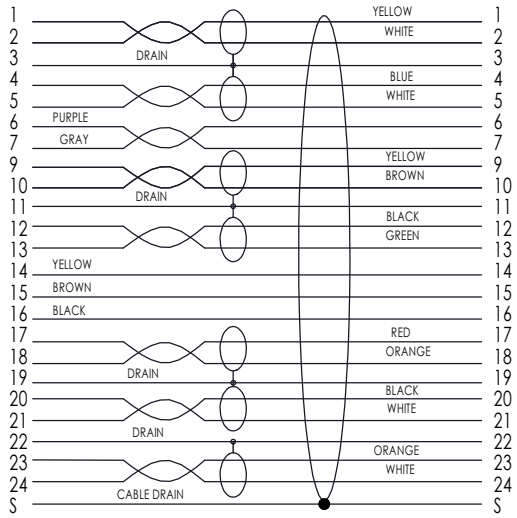

PIN 8: NO CONNECTION

LSZH CABLE CHARACTERISTICS: E
FLAME RATING: IEC 60332-1
CORROSIVE GAS: IEC 60754
SMOKE EMISSION: IEC 61034

NOTES:

1. CABLES TO BE TESTED FOR CONTINUITY
2. CABLES TO BE INDIVIDUALLY PACKAGED PER L-COM SPECIFICATION PS-0031.
3. DUST COVERS INSTALLED FOR SHIPPING (NOT SHOWN).

UNLESS OTHERWISE SPECIFIED, DIMENSIONS ARE IN INCHES [mm]
OVERALL CABLE LENGTH TOLERANCE:
≤12 [305] = +1 [25] / -0
>12 [305] ≤60 [1524] = +2 [51] / -0
>60 [1524] ≤120 [3048] = +4 [102] / -0
>120 [3048] ≤300 [7620] = +6 [152] / -0
>300 [7620] = +5% / -0
ALL OTHER DIMENSIONAL TOLERANCES:
.X = ± .2 [5] | FRACTIONS ± 1/32
.XX = ± .02 [.5] | ANGLES ± 1°
.XXX = ± .005 [.13]
THIRD-ANGLE PROJECTION

APPROVALS	DATE
DRAWN BY D. PARHAM	02/11/2010
CHECKED BY J. RUST	02/12/2010
APPROVED BY P. McNEIL	02/12/2010

CONFIGURATION DETAILS OF UNDIMENSIONED FEATURES MAY VARY
COLOR VARIATIONS MAY OCCUR
REF

L-com an INFINITE brand
50 High Street, West Mill,
North Andover, MA 01845 USA.
Phone: 1.800.341.5266
1.978.682.6936

CATEGORY
AUDIO/VIDEO

PRODUCT DESCRIPTION
DVI-DL M/DVI-DL M W/FERRITE

SIZE	CAGE CODE	DWG. NO.	REV.
A	43321	CTLDVIDMMLZ	E

SCALE: NONE | CAD FILE: CTLDVIDMMLZ.SLDDRW | SHEET 1 OF 1