E12717

Damping magnet

MAGNET M7.1 IATA E12541 5X

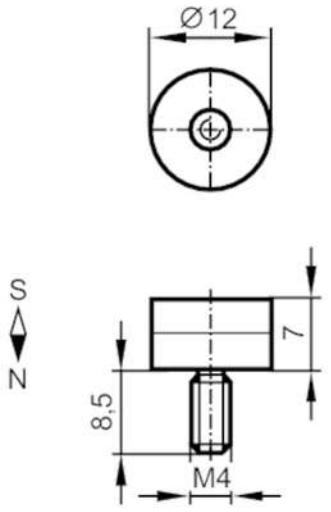

Operating conditions		
Ambient temperature	[°C]	-40...80
Mechanical data		
Weight	[g]	73.5
Dimensions	[mm]	Ø 12 / L = 7.5
Materials		neodymium; plastics
Magnetic field strength	[mT]	280
Remarks		
Pack quantity		5 pcs.