Ex-Ceiling light fittings AB 80 / AB 05 LED / AB 05 / AB 12 NAV 70

(Zone 1, 2, 21, 22)

The wall and ceiling light fixtures for particularly difficult operating conditions

The impact-resistant and flameproof luminaires of the series AB 80, AB 05 and AB 12 provide a safe and reliable light - even at extreme ambient temperatures and under extreme environmental conditions, such as those encountered in the oil and gas production industry, in- and outdoor areas of chemical plants or in heavy industry. This is due to the robust powder-coated light metal housing, stainless steel screws and a cover or tube made of scratch-resistant borosilicate glass.



The proper illuminant for your application

The AB 05 LED luminaire has an innovative 22 W LED module. The outstanding features are not only the high energy efficiency but also the resistance to shock and vibration. The luminaires of the series AB 05 and AB 80 can be fitted with incandescent or energy-saving lamps and they are used for lighting outdoor pathways or walkways and corridors. High-pressure discharge lamps are used in the luminaire series AB 05 and AB 12 NAV for lighting applications requiring a high illumination level at particularly low ambient temperatures.

AB 80 - the standard solution

This light fitting can be fitted with incandescent lamps with an E27 socket up to 100 W and is used as a wall or ceiling light



in the chemical industry. Due to the robust enclosure and the ambient temperature range up to +55°C, this light fitting is suitable for a wide variety of applications.



AB 05 LED - robust against vibrations

This extremely robust luminaire with integral wire guard and its high-efficiency LED module is resistant against shocks and vibrations, has an extremely long lamp life and has also been approved for extremely low ambient temperatures as low as minus 55 ° C. Due to an optimised light distribution for low and medium suspension heights, the AB 05 LED is ideal for illuminating walkways, corridors, stairways and storage rooms and for use in all areas with limited space.

AB 05 - solid and reliable

The winning features of the robust housing with integral wire guard are its light weight and easy installation. The ballast for high pressure discharge lamps is mounted on a removable frame. This simplifies maintenance. An internal aluminium reflector provides a uniform light distribution.





Features

- Extremely rugged design for extremely harsh environments
- Various illuminants can be used
- Wide ambient temperature range depending on the version (-55 ° C to +55 ° C)
- High degree of protection up to IP 67

AB 12 NAV 70 - even for extreme cold environments

This compact Ex-d light fixture for high pressure sodium lamps is suitable for individual lighting solutions for areas with limited mounting space. Lamp, ballast and ignitor are incorporated on a compact module, which allows easy re-lamping and maintenance work. An optional external reflector allows individual illumination of working places. The **Arctic** version even allows the use of this versatile light fitting in extreme temperature ranges from minus 50 °C up to plus 50 °C within the highest explosion group IIC, e.g. for hydrogen atmospheres.





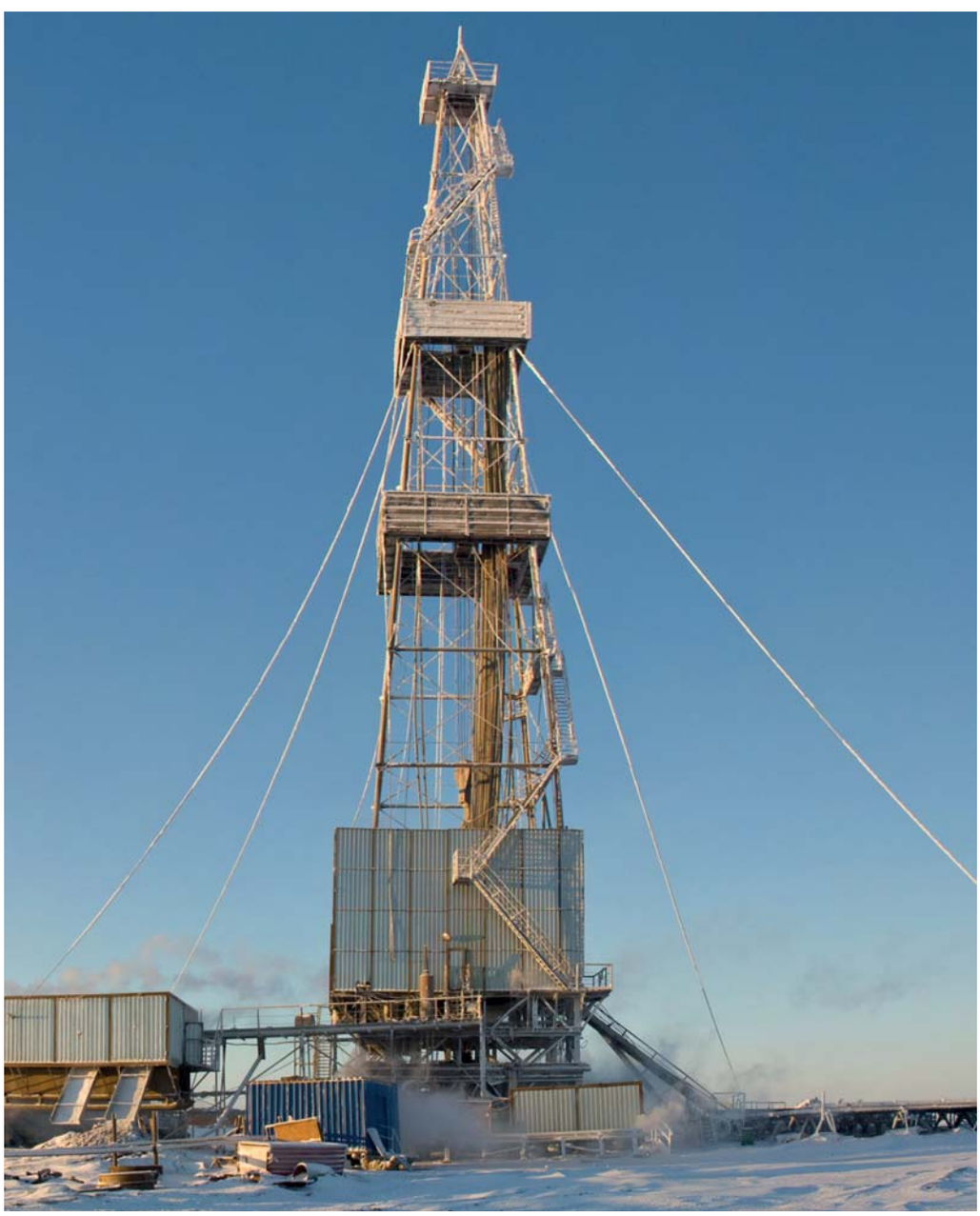

Ordering details

AB 80 / AB 05 LED / AB 05 ...

Ordering details











Type	Lamp/ Illuminant	Rated luminous flux 1)	Weight	Metal thread	Plug	Dust cap	Order No.
AB 80							
AB 80	IGA 60 W, 100 W / TC-DSE 11 W/ LED E27 lamp up to 13 W	710 lm / 1360 lm / 660 lm	6.6 kg	2 x 3/4" NPT	1 x 3/4" screw plug		**NOR 000 005 120 124**
AB 80	IGA 60 W, 100 W / TC-DSE 11 W/ LED E27 lamp up to 13 W	710 lm	6.6 kg	2 x M25	1 x M25 screw plug	x	**NOR 000 005 120 123**
AB05 LED including LED-module							
AB 05 LED	LED module 16 W	2000 lm	7.0 kg	1 x M20	-	x	**AB05 251 011 0301**
AB 05 LED	LED module 16 W	2000 lm	7.0 kg	1 x M25	-	x	**AB05 251 021 0301**
AB 05 LED	LED module 16 W	2000 lm	7.0 kg	2 x M20	1 x M20 Ex-d	x	**AB05 251 111 0301**
AB 05 LED	LED module 16 W	2000 lm	7.0 kg	2 x M25	1 x M25 Ex-d	x	**AB05 251 221 0301**
AB 05 Ex-e							
AB 05 Ex-e	IGA 60 W	710 lm	5.9 kg	1 x M20	-	x	**AB05 531 011 0001**
AB 05 Ex-e	IGA 60 W	710 lm	5.9 kg	1 x M25	-	x	**AB05 531 021 0001**
AB 05 Ex-e	IGA 60 W	710 lm	5.9 kg	2 x M25	1 x M25 Ex-d	x	**AB05 531 111 0001**
AB 05 Ex-e	IGA 60 W	710 lm	5.9 kg	1 x M25	-	x	**AB05 531 221 0001**
AB 05 Ex nR							
AB 05 Ex nR	HSE 70 W	5600 lm	5.4 kg	1 x M20	-	x	**AB05 611 011 0001**
AB 05 Ex nR	HSE 70 W	5600 lm	6.9 kg	1 x M25	-	x	**AB05 611 021 0002**
AB 05 Ex nR	HSE 70 W	5600 lm	5.4 kg	2 x M20	1 x M20 Ex-d	x	**AB05 611 111 0001**
AB 05 Ex nR	HSE 70 W	5600 lm	5.4 kg	2 x M25	1 x M25 Ex-d	x	**AB05 611 221 0001**
AB 05 Ex nR	HME 80 W	3800 lm	6.9 kg	2 x M25	1 x M25 Ex-d	x	**AB05 621 221 0001**
AB 05 Ex nR	IGA 200 W	3100 lm	6.9 kg	1 x M25	-	x	**AB05 631 021 0001**
AB 05 Ex-d IIB +H2							
AB 05 Ex-d IIB +H2	HSE 70 W	5600 lm	6.9 kg	1 x M20	-	x	**AB05 111 011 0001**
AB 05 Ex-d IIB +H2	HSE 70 W	5600 lm	6.9 kg	1 x NPT 1/2"	-	x	**AB05 111 031 0001**
AB 05 Ex-d IIB							
AB 05 Ex-d IIB	HSE 70 W	5600 lm	6.9 kg	1 x M20	-	x	**AB05 211 011 0001**
AB 05 Ex-d IIB	HSE 70 W	5600 lm	6.9 kg	1 x M20	1 x M20 Ex-d	x	**AB05 211 111 0001**

[1] depends on used lamps

Scope of delivery without lamp and fixing accessories, if not stated otherwise.
Metal cable glands see catalogue part 2: 2.3.12 ff

Ordering details





Type	Lamp/ Illuminant	Rated luminous flux [1]	Weight	Metal thread	Plug	Dust cap	Order No.
AB 12 NAV 70 ...							
AB 12 NAV 70, IIC G2 -20 °C up to +40 °C	HSE 70 W	5600 lm	5.3 kg	2 x 3/4" NPT	1 x 3/4'' Ex-d	x	**NOR 000 005 060 074**
AB 12 NAV 70, IIB G2 -45 °C up to +55 °C	HSE 70 W	5600 lm	5.3 kg	2 x 3/4" NPT	1 x 3/4'' Ex-d	x	**NOR 000 005 060 075**
AB 12 NAV 70 Arctic ...							
AB 12 NAV 70 Arctic IIC, -50 °C up to +40 °C	HST 70 W	5600 lm	5.6 kg	2 x 3/4" NPT	1 x 3/4'' Ex-d	x	**1 1750 000 353**
AB 12 NAV 70 Arctic IIC, -50 °C up to +40 °C	HST 70 W	5600 lm	5.6 kg	2 x M25	1 x M25 Ex-d	x	**1 1750 000 354**

[1] depends on used lamps

Scope of delivery without lamp and fixing accessories, if not stated otherwise.
Metal cable glands see catalogue part 2: 2.3.12 ff

Accessories

Type	Content	Application	OU	Order No.
GAB 80	Wire guard, galvanized	AB 80	1	**NOR 000 005 120 439**
Lamp HSE 70 W	High pressure sodium lamp 70 W E27	AB 05, AB 12 NAV 70	1	**3 2475 900 012**
Lamp HST 70 W	High pressure sodium lamp 70 W E27	AB 12 NAV 70 Arctic	1	**3 1750 301 070**
D92	Ceiling mounting bracket incl. screws and polyamide washer - Stainless steel (2 pcs.)	AB 12 NAV 70	1	**2 2480 092 000**
A5	Ceiling bracket hot galvanized (1 pc.)	AB 12 NAV 70	1	**NOR 000 005 009 196**
BFP 45	Wall bracket 45° hot galvanized (1 pc.)	AB 12 NAV 70	1	**NOR 003 045 060 471**
Reflector RAB 108	Material: AISI 304	AB 12 NAV 70	1	**NOR 003 045 060 471**
Reflector RAB 108	Material: AISI 304 with wire guard white	AB 12 NAV 70	1	**NOR 003 045 060 819**
Reflector RAB 108	Material: AISI 316	AB 12 NAV 70	1	**NOR 003 165 060 471**
Reflector RAB 108	Material: AISI 316 with wire guard white	AB 12 NAV 70	1	**NOR 003 165 060 819**

Metal cable glands see catalogue part 2, page 2.3.12 ff

Dimension drawing / Polar curve

AB ...

Polar curve AB 05 LED

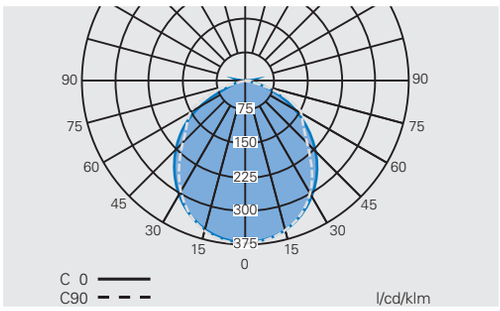

AB 05 LED

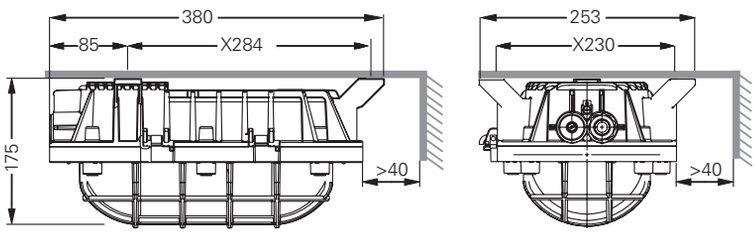

Polar curve AB 05 Ex de

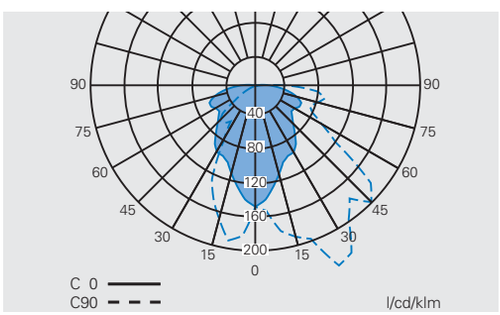

AB 80

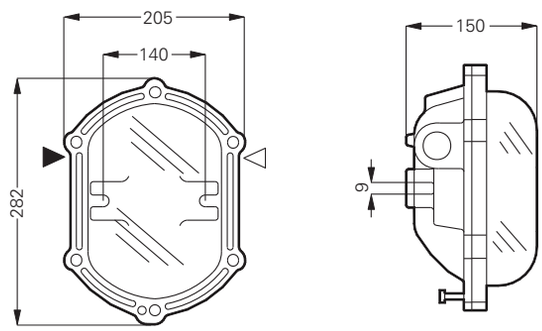

Polar curve AB 05 nR

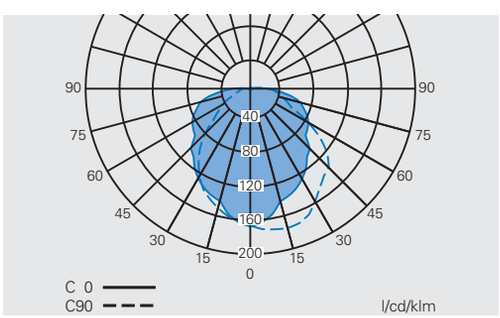

AB 12 NAV

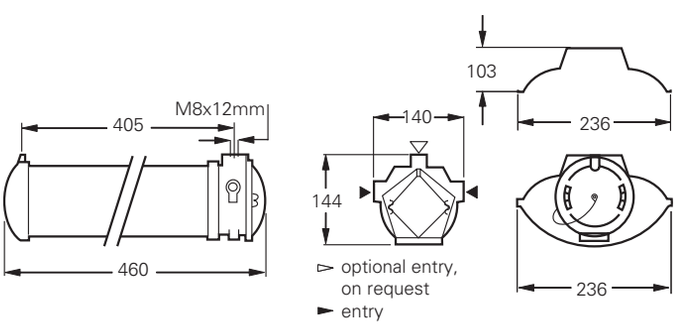

Polar curve AB 12 NAV 70 without reflector

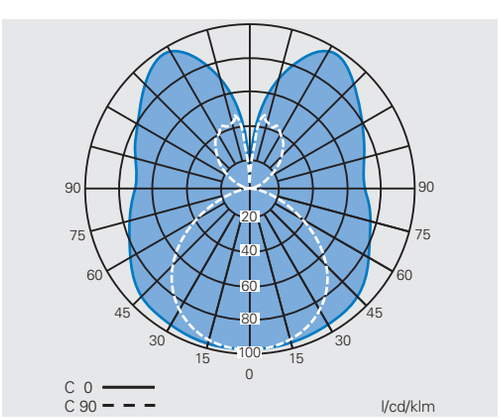

Polar curve AB 12 NAV 70 with reflector

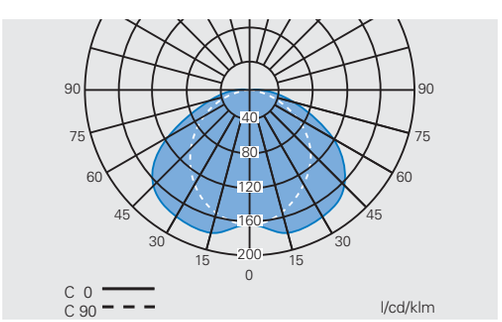

Dimensions in mm





Technical data

	AB 80	AB 05 LED
EC-Type Examination Certificate	LOM 01 ATEX 2041 X	BVS 09 ATEX E 014 X
IECEx Certificate of Conformity		IECEx BVS 09.0032X
Marking accd. to 2014/34/EU	Ⓔx II 2 G Ex d IIB T4.. T6 Gb	Ⓔx II 2 G Ex d IIB T6 (Tu ≤ +40°C)/T5 Gb Ⓔx II 2 D Ex tb IIIC T80 °C (Tu ≤ +40°C)/T100 °C Db IP66
Marking accd. to IECEx		Ex d IIB T6 (Tu ≤ +40°C)/T5 Gb Ex tb IIIC T80°C (Tu ≤ +40°C)/T100°C Db
Permissible ambient temperature	-20 °C up to +55 °C	-55 °C up to +55 °C
Rated voltage	max. 250 V	230 V AC
Frequency		50 - 60 Hz
Power consumption		approx. 23 W
Protection class	I	I
Lamp / Illuminant	Incandescent lamp	LED module 22 W (incl.)
Rated luminous flux	[1]	
Rated luminous flux of the luminaire (typical, ± 10 %)		1453 lm
Lamp cap	E27	LED module
Light output ratio	60 %	100 %
Dimensions (L x W x H)	282 x 205 x 150 mm	360 x 230 x 175 mm
Connecting terminals	L1, N, PE: 2 x 2.5 mm^2	L1, N, PE: type MUT 4, 2 x 4 mm^2
Enclosure earth	2 x 6 mm^2	2 x 6 mm^2
Enclosure colour	Epoxy paint, body RAL 7032	Epoxy paint, body RAL 7032
Enclosure material	cast iron	light alloy
Weight	6.6 kg	7.0 kg
Cable glands / gland plates / enclosure drilling	2 x M25 x 1.5 or 2 x 3/4'' NPT (with adaptor)	1 x M20/M25 x 1.5, 2 x M20/M25 x 1.5, 1 x 3/4" NPT or 2 x 3/4'' NPT on request
Type of mounting	ceiling/wall mounting	ceiling/wall mounting
Degree of protection accd. to EN EN 60598	IP65	IP66
Protective cover / protective bowl	borosilicate glass	borosilicate glass
Screw plugs	1 x M25 or 3/4'' NPT Ex-d screw plug	1 x M20/M25 or 3/4" NPT Ex-d screw plug

[1] depends on used lamps

4.2 Technical data

AB 05 Ex-e / AB 05 Ex nR





Technical data

	AB 05 Ex-e	AB 05 Ex nR
Type Examination Certificate		BVS 07 ATEX E 151
EC-Type Examination Certificate	BVS 07 ATEX E 152 X	
IECEx Certificate of Conformity	IECEx BVS 10.0070X	IECEx BVS 10.0071
Marking accd. to 2014/34/EU	Ⓔx II 2 G Ex de IIC T3 [2]/T2 Gb Ⓔx II 2 D Ex tb IIIC T125 °C Db IP66	Ⓔx II 3 G nR II T4/T3 Gc Ⓔx II 3 D Ex tc IIIC T100°C/ T125°C/ T140°C Dc IP66
Marking accd. to IECEx	Ex de IIC T3 [2]/T2 Gb Ex tb IIIC T125 °C Db IP66	Ex nR IIC T4/T3 Gc Ex tc IIIC T100°C/T125°C/T140°C Dc IP66
Permissible ambient temperature	-20 °C up to +55 °C	-55 °C up to +55 °C
Rated voltage	max. 250 V	230 V AC
Frequency	50 - 60 Hz	50 - 60 Hz
Power factor cos φ		≥ 0.9
Protection class	I	I
Lamp / Illuminant	Incandescent lamp max. 60 W	incandescent lamp max. 200 W, high pressure sodium lamp HSE 70 W, compact fluorescent lamp max. 23 W
Rated luminous flux	710 lm [1]	[1]
Lamp cap	E27 accord. IEC 60238	E27 accord. IEC 60238
Light output ratio	70 %	70 %
Dimensions (L x W x H)	360 x 230 x 175 mm	360 x 230 x 175 mm
Connecting terminals	L1, N, PE: 2 x 2.5 mm^2	L1, N, PE: 2 x 2.5 mm^2
Enclosure earth	2 x 6 mm^2	2 x 6 mm^2
Enclosure colour	Epoxy paint, body RAL 7032	Epoxy paint, body RAL 7032
Enclosure material	light alloy	light alloy
Weight	5.9 kg	6.9 kg
Cable glands / gland plates / enclosure drilling	1 x M20/M25 x 1.5, 2 x M20/M25 x 1.5, 1 x 3/4" NPT or 2 x 3/4" NPT	1 x M20/M25 x 1.5, 2 x M20/M25 x 1.5, 1 x 3/4" NPT or 2 x 3/4" NPT
Type of mounting	ceiling-/wall mounting	ceiling-/wall mounting
Degree of protection accd. to EN 60529	IP66	IP66
Protective cover / protective bowl	borosilicate glass	borosilicate glass
Screw plugs	max. 1 x M20/M25 or 3/4" NPT Ex-d screw plug	max. 1 x M20/M25 or 3/4" NPT Ex-d screw plug

[1] depends on used lamps

[2] T3 when using a 60 W incandescent lamp accord. to EN 60064 and DIN 49810 with"T"-marking

Additional luminaire data AB 05 Ex nR

Lamp	Power	Luminous flux [1]	Temperature class II 2/3 G	max. surface temp. II 2/3 D
Compact fluorescent lamp [2]	23 W	1450 lm	T4	T 130 °C
High pressure sodium lamp	70 W	5600 lm	T4	T 125 °C
Incandescent lamp IGA	200 W	3150 lm	T3	T 140 °C

[1] depends on used lamps / [2] $T_U \leq 30$ °C





Technical data

	AB 05 Ex-d IIB +H2 / AB 05 Ex-d IIB	AB12 NAV70 / AB 12 NAV 70 Arctic
EC-Type Examination Certificate	PTB 08 ATEX 1001 X	LOM 02 ATEX 2013X
IECEx Certificate of Conformity		IECEx BKI 07.0008X
Marking accd. to 2014/34/EU	Ex II 2 G Ex d IIB (+H2) T4/T3 Gb / Ex II 2 G Ex d IIB T4/T3 Db	Ex II 2 G Ex d IIB/IIC T3 Gb Ex II 2 D Ex t IIIC T155 °C Db Ex II 2 G Ex d IIC T3 Gb Ex II 2 D Ex t IIIC T155 °C Db
Marking accd. to IECEx		Ex d IIB T3 / Ex d IIC T3 Ex tD A21 IP66 T150°C
Permissible ambient temperature	-20 °C up to +55 °C	-20 °C up to +55 °C (gas-group IIC); -45 °C up to +55 °C (gas-group IIB) / -50 °C up to +40 °C (Arctic)
Rated voltage	230 V AC	230 V AC
Rated current		0.36 A
Frequency	50 - 60 Hz / 50 Hz	50 Hz
Power factor cos φ	≥ 0.9	≥ 0.9
Protection class	I	I
Lamp name	incandescent lamp up to 200 W, high pressure sodium lamp HSE 70 W	High pressure sodium lamp HST 70 W
Rated luminous flux	[1]	5600 lm [1]
Lamp cap	E27 accord. IEC 60238	E27 accord. IEC 60238
Light output ratio	70 %	51%
Dimensions (L x W x H)	360 x 230 x 175 mm	460 x 140 x 144 / 530 x 140 x 144
Connecting terminals	L1, N, PE: 2 x 2.5 mm²	L1, N, PE: 2 x 2.5 mm², PE: 2 x 6 mm²
Enclosure earth	2 x 6 mm²	2 x 6 mm²
Enclosure colour	Epoxy paint, body RAL 7032	Epoxy paint, body RAL 7032
Enclosure material	light alloy	light alloy
Weight	6.9 kg	5.3 kg / 5.6 kg
Cable glands / gland plates / enclosure drilling	1 x M20/M25 x 1.5, 2 x M20/M25 x 1.5, 1 x 3/4" NPT or 2 x 3/4" NPT	2 x 3/4" thread (Ex-d) / 2 x 3/4" or 2 x M25 thread (Ex-d)
Type of mounting	ceiling-/wall mounting	ceiling-/wall mounting
Degree of protection accd. to EN 60529	IP66	IP67
Protective cover / protective bowl	borosilicate glass	borosilicate glass
Screw plugs	max. 1 x M20/M25 or 3/4" NPT Ex-d screw plug	1 x 3/4'' Ex-d screw plug

[1] depends on used lamps

Additional luminaire data AB 05 Ex-d IIB +H2 / AB 05 Ex-d IIB

Lamp	Power	Luminous flux [1]	Permissible ambient temperature	Temperature class II 2 G
Incandescent lamp IGA	40 W	430 lm	-20 °C up to +55 °C	T4
Incandescent lamp IGA	60 W	3100 lm	-20 °C up to +55 °C	T4
Incandescent lamp IGA	100 W	1380 lm	-20 °C up to +55 °C	T4
Incandescent lamp IGA	200 W	3150 lm	-20 °C up to +55 °C	T4
High pressure sodium lamp	70 W	5600 lm	-20 °C up to +40 °C	T4

[1] depends on used lamps