# Main switch 3P, mounting, padlock

**Part no.** DMM-125/3/I5/P-R
**Article no.** 172851
**Catalog No.** DMM-125/3/I5/P-R

## Delivery programme

| | | | |
|---|---|---|---|
| Product range | | | Switch-disconnectors Dumeco |
| Basic function | | | Main switches<br>Maintenance switches<br>Manual override switches |
| Part group reference | | | DMM |
| Protection type | | | IP20 |
| Emergency switching OFF/ emergency STOP | | | as emergency switching off/ emergency stop function<br>in CI-K5 enclosure<br>With red rotary handle and yellow locking ring |
| Design | | | main switch surface mounting |
| Locking facility | | | 1 padlock, Ø 5 mm |
| Contacts | | | auxiliary contact fitted by user |
| Main circuits<br>Poles [M] | | | 3 |
| Contact sequence | | | |
| Rated uninterrupted current | $I_u$ | A | 125 |

## General

| | | | |
|---|---|---|---|
| Standards | | | IEC/EN 60947, VDE 0660, IEC/EN 60204, CSA<br>Switch-disconnector according to IEC/EN 60947-3 |
| Certifications | | | CE, RoHs, KEMA, GOST-R, Lloyds |
| Ambient temperature | | °C | |
| Operation | ϑ | °C | -25 - +55 |
| Storage | ϑ | °C | -30 - +80 |
| Overvoltage category/pollution degree | | | III/3 |
| Rated impulse withstand voltage | $U_{imp}$ | V AC | 6000 |
| Rated insulation voltage | $U_i$ | V AC | 1000 |
| Mounting position | | | As required |
| Protection against direct contact when actuated from front (EN 50274) | | | Finger and back-of-hand proof |

## Contacts

| | | | |
|---|---|---|---|
| Mechanical variables | | | |
| Main circuits<br>Poles | | | 3 |
| Electrical characteristics | | | |
| Rated operational voltage | $U_e$ | V AC | 690 |
| Rated uninterrupted current | $I_u$ | A | 125 |
| Note on rated uninterrupted current $!_u$ | | | Rated uninterrupted current Iu is specified for max. cross-section. |
| Short-circuit rating | | | |
| fuse | | | 125 |
| Rated conditional short-circuit current | Iq | kA | 50 |
| Breaking current | | kA | 14.5 |

| | | |
|---|---|---|
| max. let-through energy | $kA^2s$ | 140 |
| Rated short-time withstand current (1 s current) | $I_{cw}$ $A_{rms}$ | 2500 |
| Note on rated short-time withstand current Icw | | Current for a time of 1 second |

## Switching capacity

| | | |
|---|---|---|
| Bemessungsausschaltvermögen cos φ nach IEC 60947-3 | A | |
| 400/415 V | A | 480 |
| 500 V | A | 520 |
| 690 V | A | 352 |
| Safe isolation to EN 61140 | | |
| Current heat loss per contact at $I_e$ | W | 4.5 |
| Lifespan, mechanical | Operations | 10000 |
| AC | | |
| AC-22A | | |
| Bemessungsbetriebsstrom Lastschalter | | |
| 400 V 415 V | $I_e$ A | 125 |
| 500 V | $I_e$ A | 125 |
| 690 V | $I_e$ A | 125 |
| AC-23A | | |
| Bemessungsbetriebsstrom Lastschalter | | |
| 400 V 415 V | $I_e$ A | 60 |
| 500 V | $I_e$ A | 65 |
| 690 V | $I_e$ A | 44 |
| Bemessungsbetriebsleistung AC-23A, 50 - 60 Hz | P kW | |
| 400 V 415 V | P kW | 30 |
| 500 V | P kW | 45 |
| 690 V | P kW | 40 |

## Terminal capacities

| | | |
|---|---|---|
| Flexible with ferrules to DIN 46228 | $mm^2$ | |
| flexible | $mm^2$ | 6 - 70 |
| Max. tightening torque | Nm | 7 |

## Dimensions

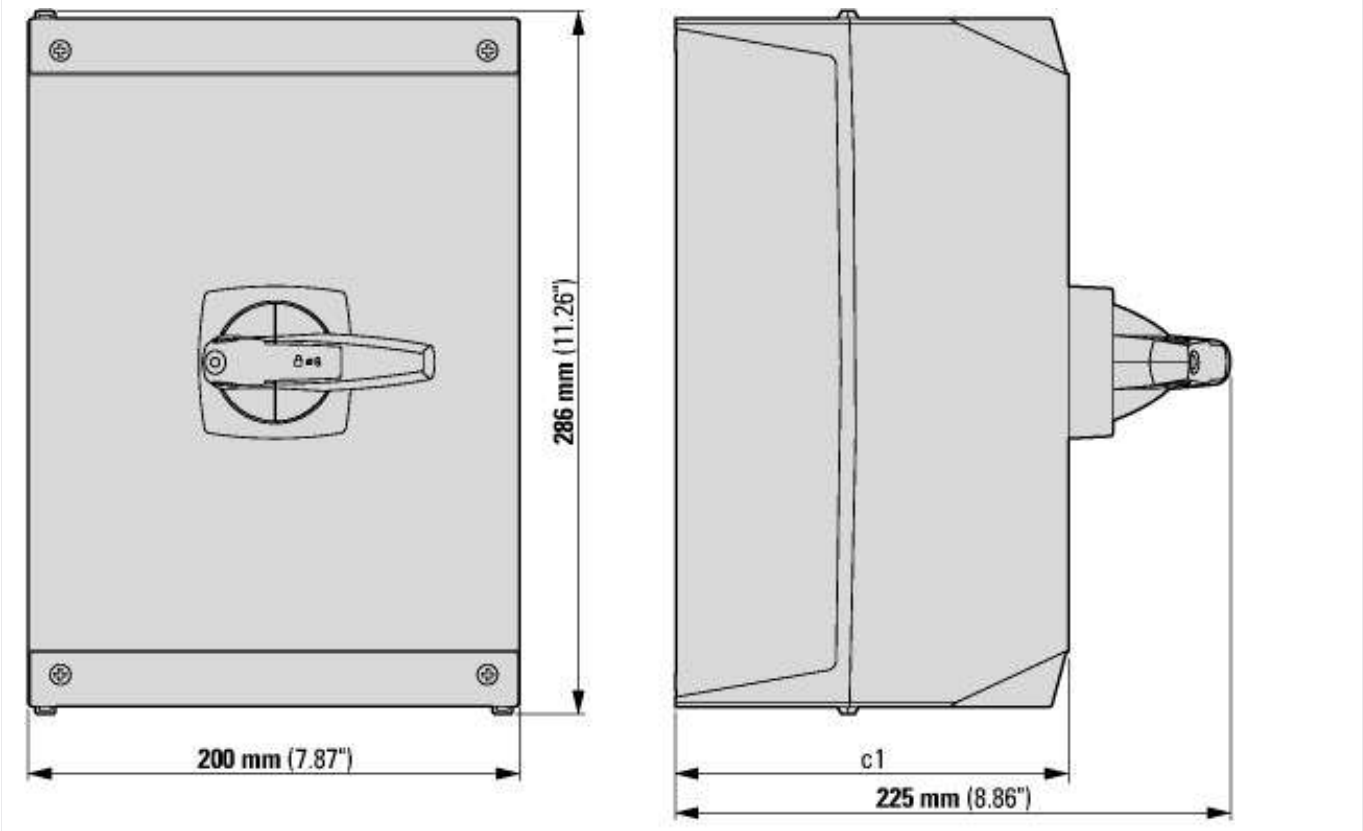

## Additional product information (links)

| |
|---|
| http://de.ecat.moeller.net/flip-cat/?edition=HPLTEv1&startpage=4.2 |
| http://de.ecat.moeller.net/flip-cat/?edition=HPLTEv1&startpage=4.4 |
| http://de.ecat.moeller.net/flip-cat/?edition=HPLTEv1&startpage=4.6 |
| http://de.ecat.moeller.net/flip-cat/?edition=HPLTEv1&startpage=4.8 |
| http://de.ecat.moeller.net/flip-cat/?edition=HPLTEv1&startpage=4.8 |


© 12/2013 by Eaton Industries GmbH