Bussmann series
Red spot BS fuse holders



Product description

Eaton's Bussmann series Red Spot British standard industrial fuse holders address many applications needs. They are fully shrouded for greater safety. The high resistance body material helps ensure high dielectric strength. The extremely reliable contact system ensures superior electrical conductivity.

Catalogue symbol:

- RS(amp)F: Front connected
- RS(amp)P: Back stud connected
- RS(amp)PH: Front/Back stud connected
- RS20F: Back stud connected, flush mounted

Agency information:

- BS88
- IEC 60269

Technical data:

- Rated voltage: 690 V a.c. (BS88 and IEC 60269)
- Rated current: 20 to 400 A
- Terminal conductor range: 10 to 240 mm^2
- Maximum ambient operating temperature: 40°C
- Protection index: IP20

Packaging:

- 20 to 63 A: 10 per pack
- 100 A: 5 per pack
- 200 and 400 A: 1 per pack

Table 1. Part numbers details

Fuse holder description	Colour	20 A	32 A	63 A	100 A	200 A	400 A
Front connected	Black	RS20H	RS32H	RS63H	RS100H	RS200H	RS400H
	White	RS20HWH	RS32HWH	RS63HWH	RS100HWH	RS200HWH	
	Green	RS20HGN	RS32HGN				
	Grey	RS20HGY					
Back stud connected	Black	RS20P/G	RS32P	RS63P	RS100P	RS200P	RS400P
	White	RS20P/GWH	RS32PWH	RS63PWH	RS100PWH	RS200PWH	
	Green	RS20P/GGN	RS32PGN				
	Grey	RS20P/GGY					
Front/Back stud connected	Black	RS20PH/G	RS32PH	RS63PH	RS100PH	RS200PH	RS400PH
	White			RS63PHWH			
Back stud connected, flush mounted	Black	RS20F					
	White	RS20FWH					
	Green	RS20FGN					
	Grey	RS20FGY					

Table 2. Technical data

Rated current (Amps)	Rated voltage (V a.c.)	Agency markings	Minimum conductor size	Maximum conductor size	Compatible fuse links	Packaging
20	690	BS88 and IEC60269	1 mm^2	10 mm^2	NITD, NIT	10
32			1 mm^2	16 mm^2	TIA, AAO, H07-660	10
63			4 mm^2	50 mm^2	TIS, BAO, K07-660	10
100			6 mm^2	70 mm^2	TCP, CEO, L14-660	5
200			10 mm^2	120 mm^2	TF, DD, M09-660	1
400			25 mm^2	240 mm^2	TM, EF, P11-660	1

Weights:

- RS20H: 136 grams
- RS20P: 180 grams
- RS20PH: 150 grams
- RS20F: 210 grams

- RS32H: 250 grams
- RS32P: 300 grams
- RS32PH: 275 grams

- RS63H: 325 grams
- RS63P: 450 grams
- RS63PH: 380 grams

- RS100H: 850 grams
- RS100P: 1 kg
- RS100PH: 925 grams

- RS200H: 2 kg
- RS200P: 2.2 kg
- RS200PH: 2.4 kg

- RS400H: 6.2 kg
- RS400P: 7.2 kg
- RS400PH: 7.7 kg

Table 3. Accessories

Catalogue numbers	Description	Pack quantity	Compatible fuse links	Compatible fuse holders
RS20LOCK	Padlockable inserts	20	N/A	RS20
RS32LOCK		10	N/A	RS32
RS63LOCK		10	N/A	RS63
RS100LOCK		10	N/A	RS100
RS20RED	Red warning carriers	10	N/A	RS20
RS32RED		10	N/A	RS32
RS63RED		10	N/A	RS63
RS100RED		1	N/A	RS100
P5372-10	Fuse link adaptor kits	1	TIA, TIS, AAO, BAO	RS100
TCA2		1	AD, BD, CD, DD, TBC, TC, TF	RS400



RS-LOCK



RS-RED



P5372--10



TCA2

Dimensions - mm

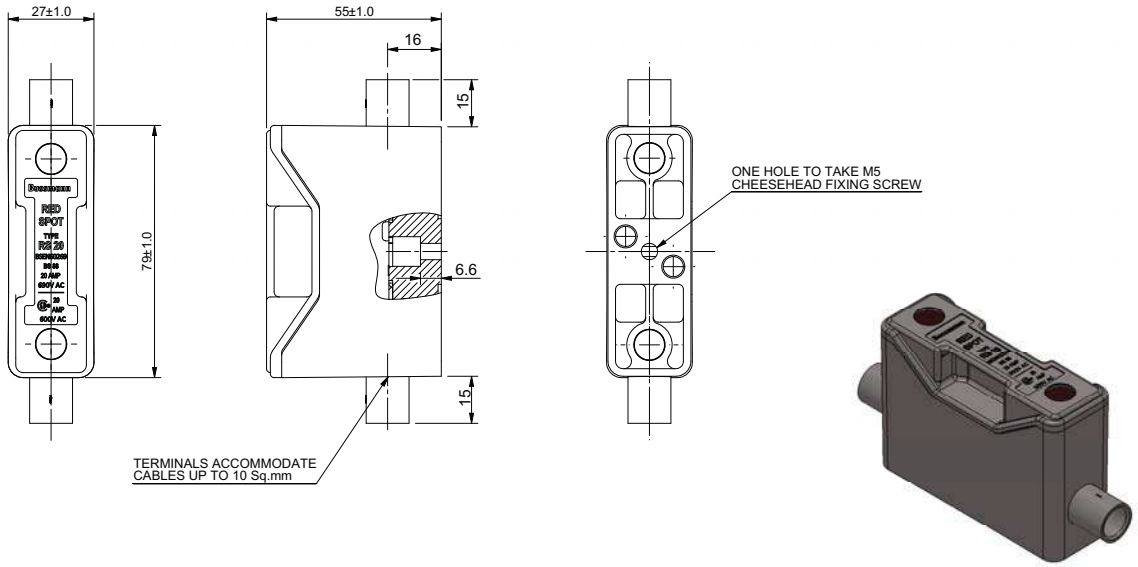

RS20H , 20 A, Front connected

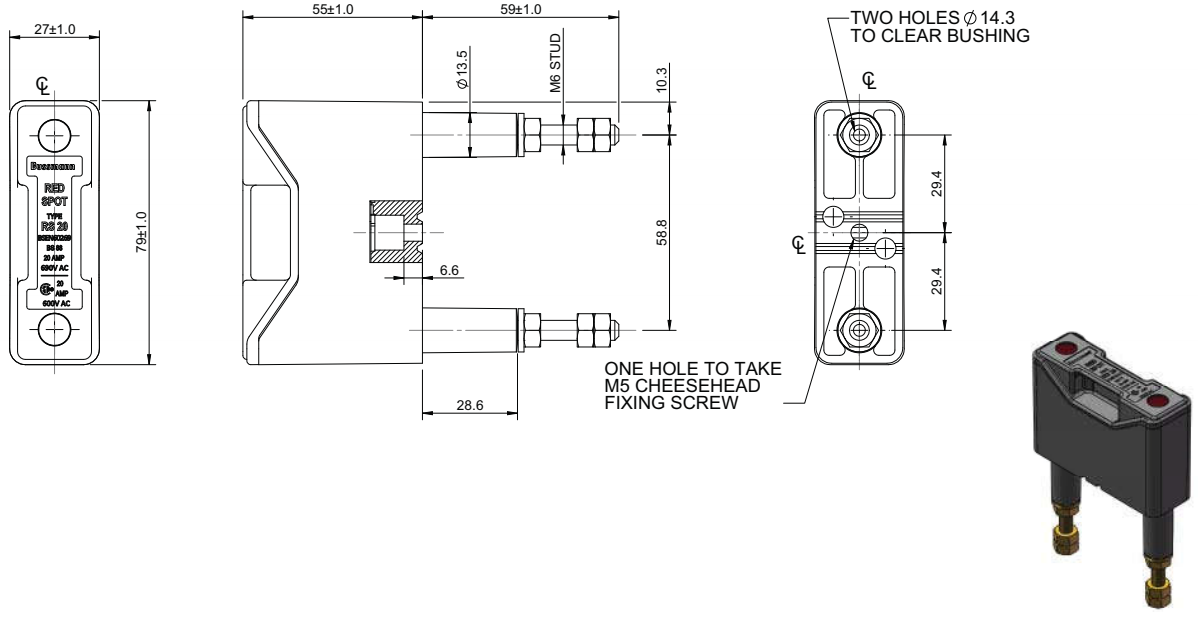

RS20P, 20 A, Back stud connected

Dimensions - mm

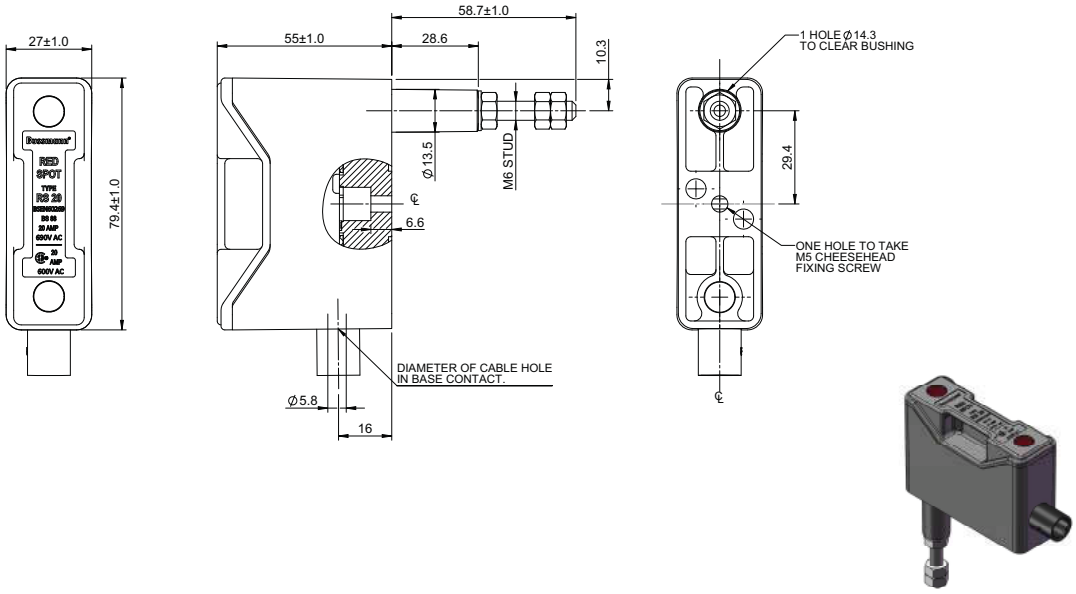

RS20PH, 20 A, Front/Back stud connected

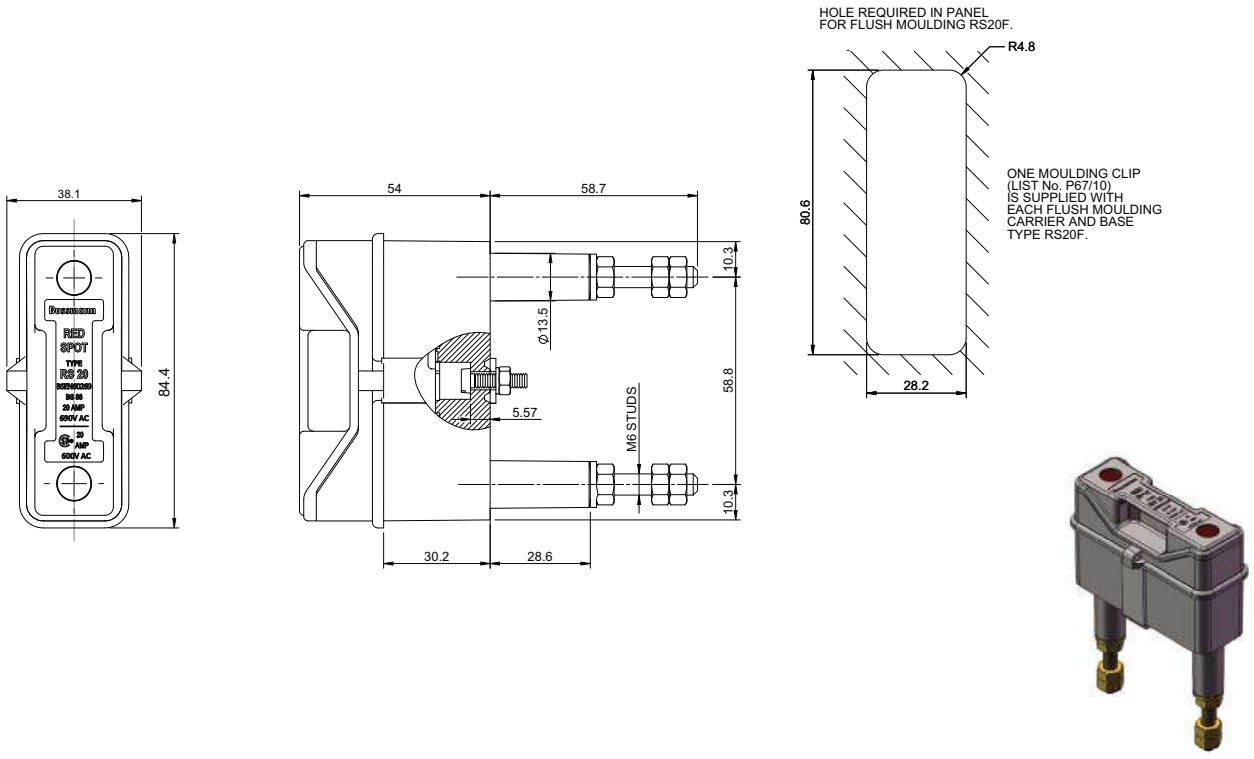

RS20F, 20 A, Back stud connected, flush mounted

Dimensions - mm

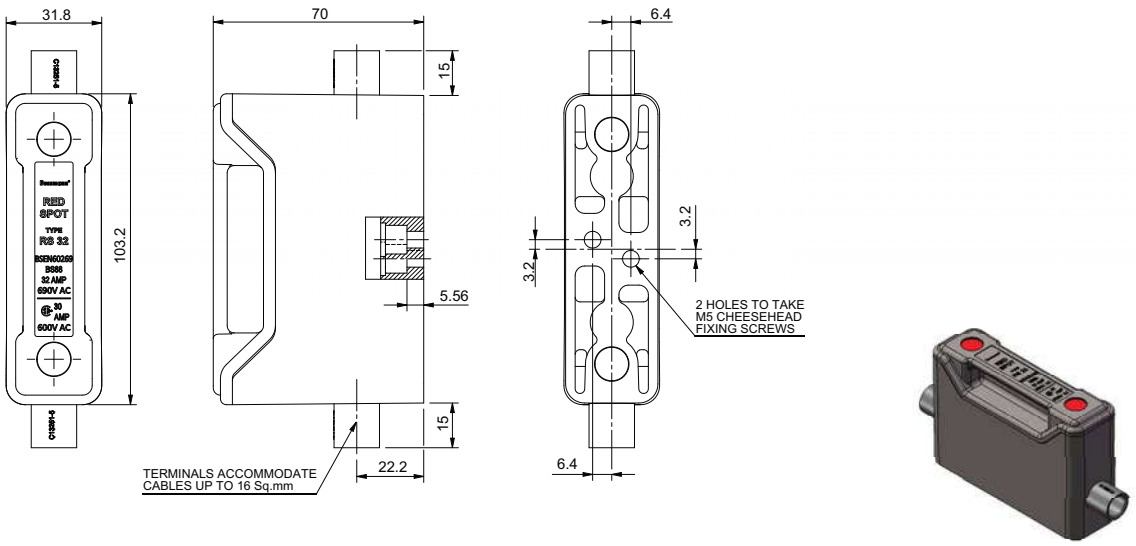

RS32H, 32 A, Front connected

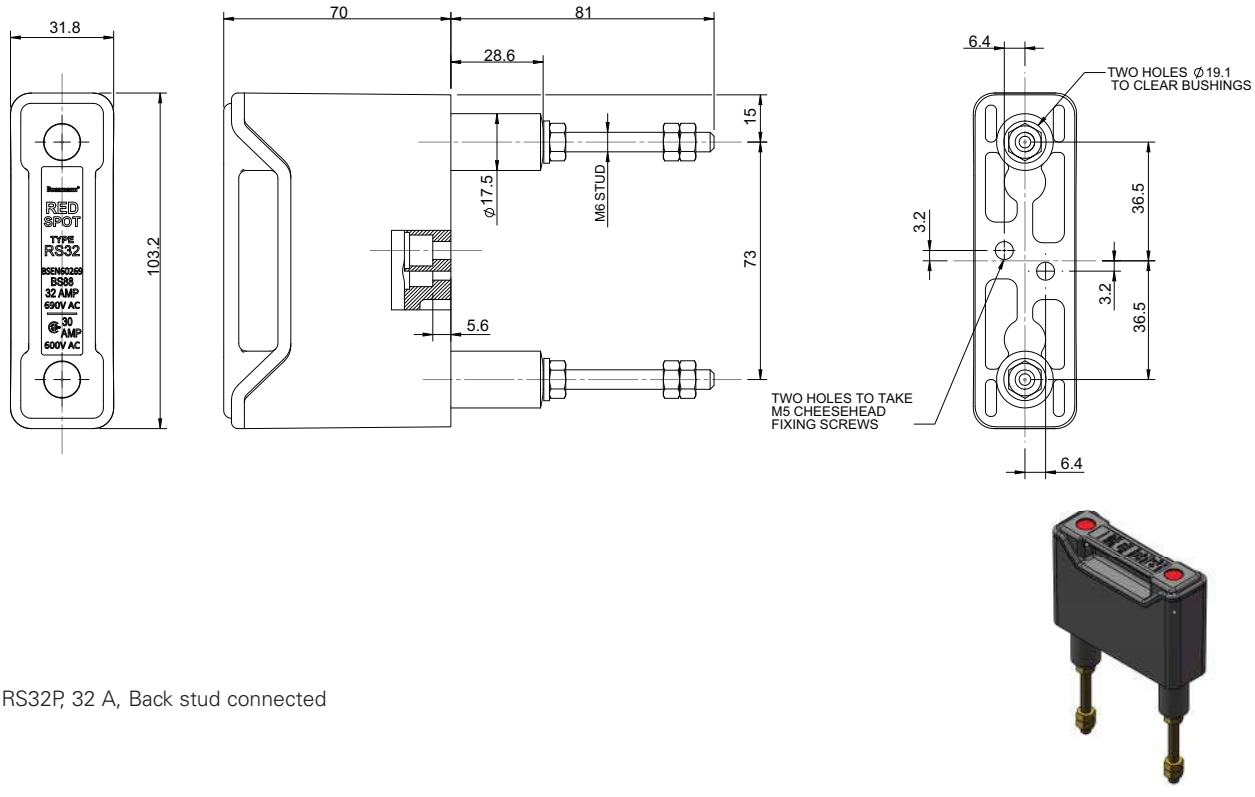

RS32P, 32 A, Back stud connected

Dimensions - mm

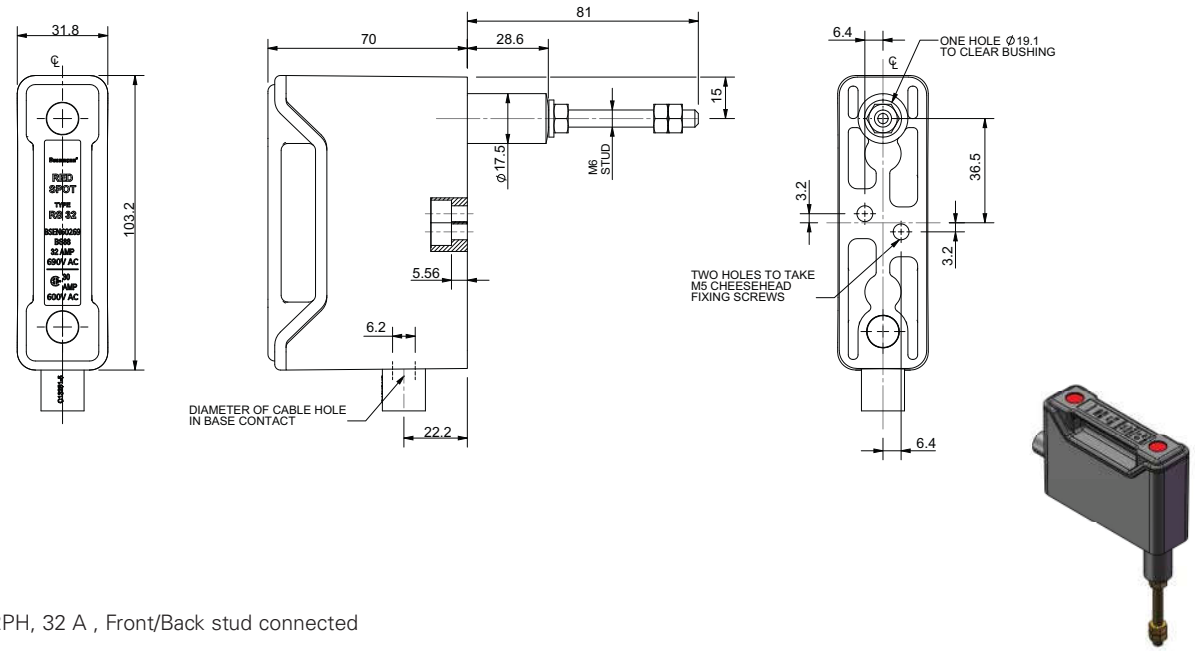

RS32PH, 32 A , Front/Back stud connected

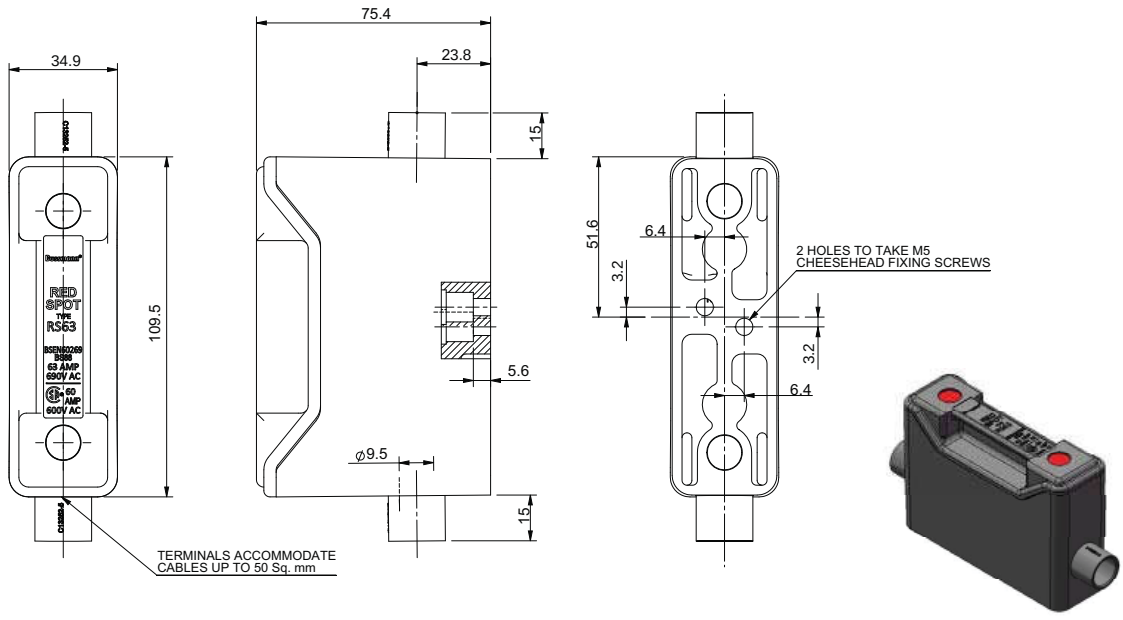

RS63H, 63 A, Front connected

Dimensions - mm

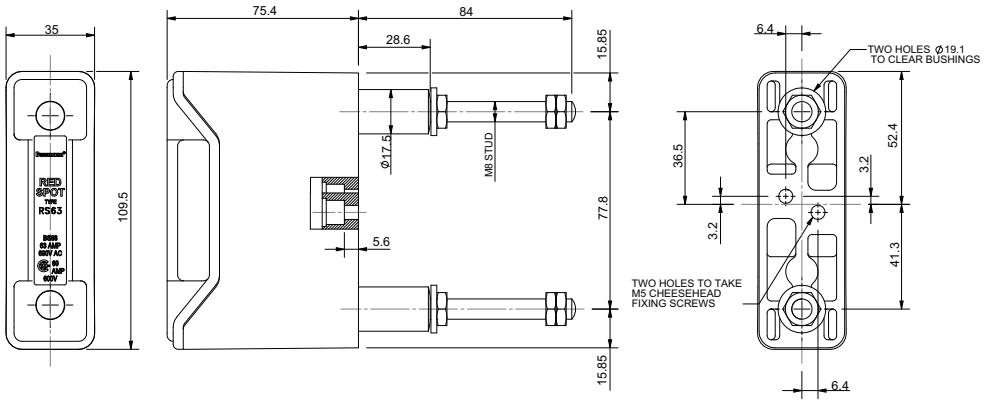



RS63P, 63 A, Back stud connected

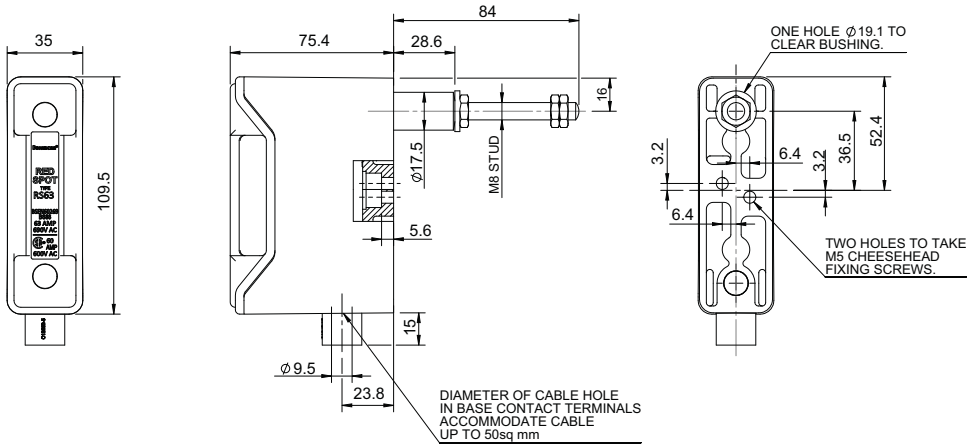

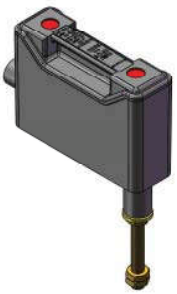

RS63PH, 63 A, Front/Back stud connected

Dimensions - mm

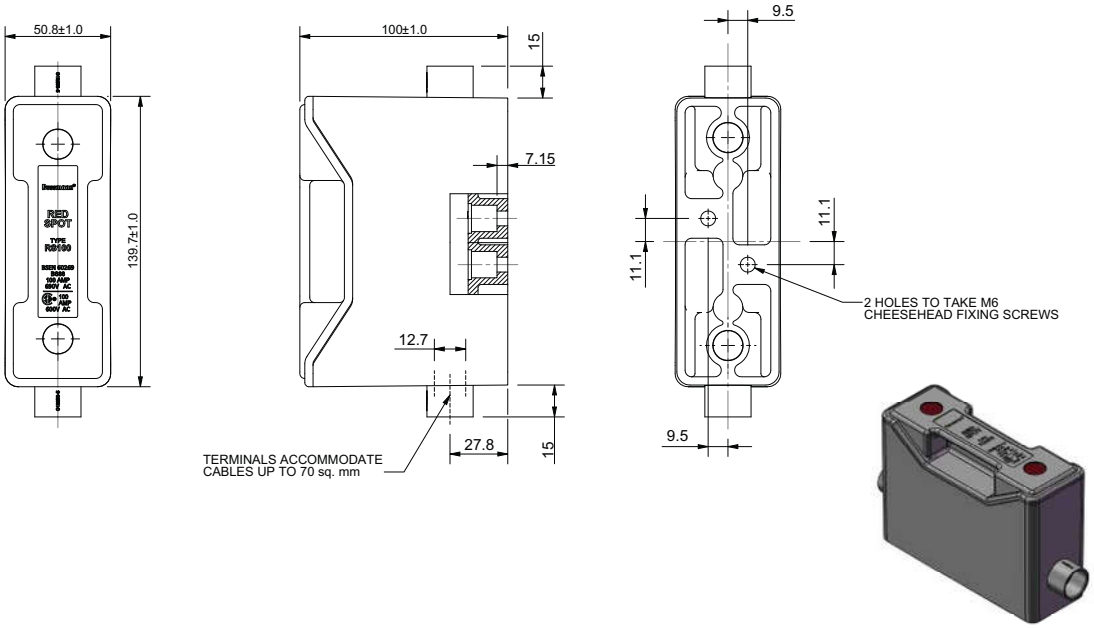

RS100H, 100 A , Front connected

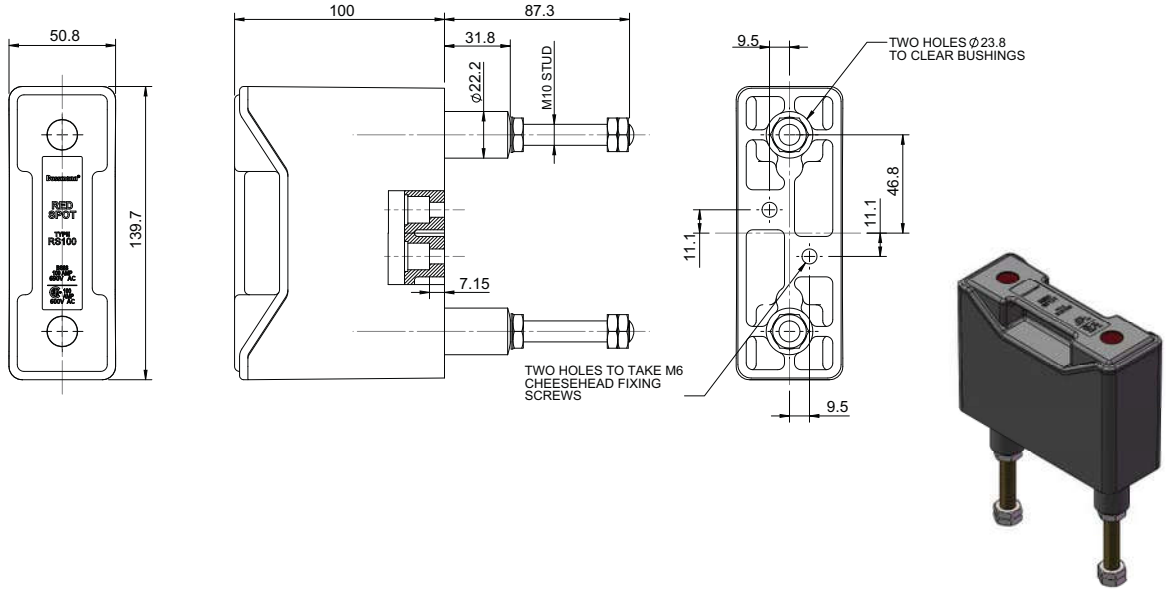

RS100P, 100 A, Back stud connected

Dimensions - mm

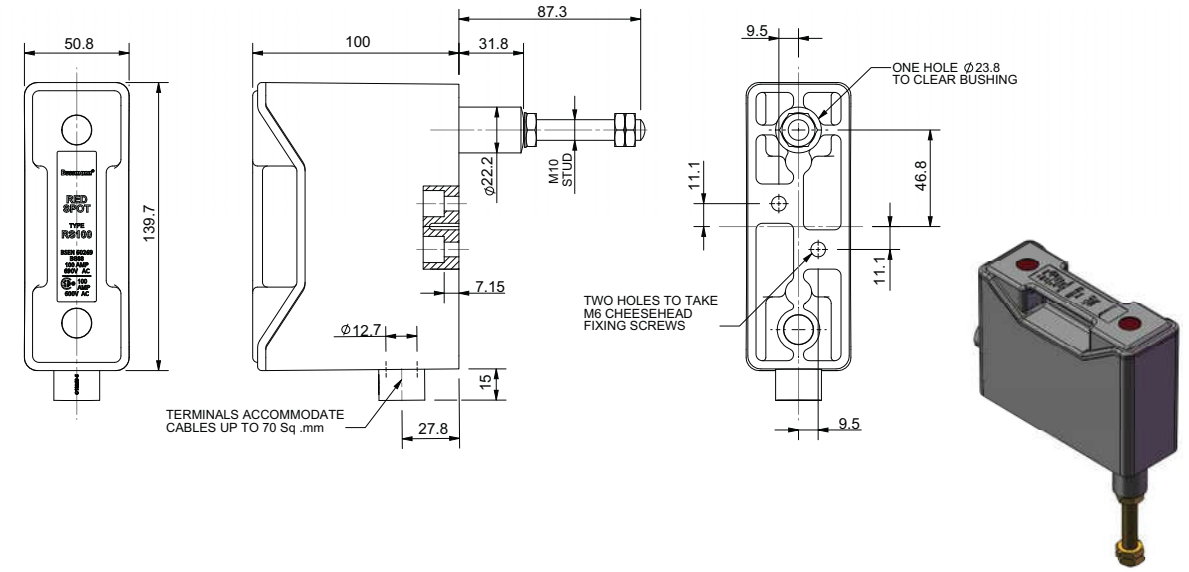

RS100PH, 100 A, Front/Back stud connected

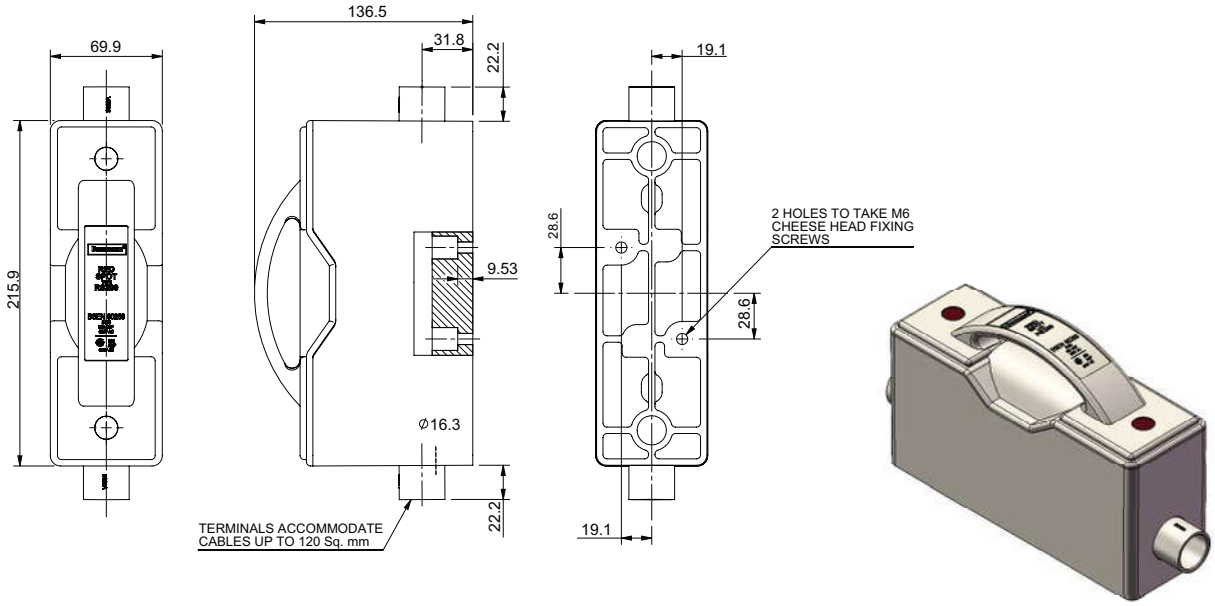

RS200H, 200 A, Front connected

Dimensions - mm

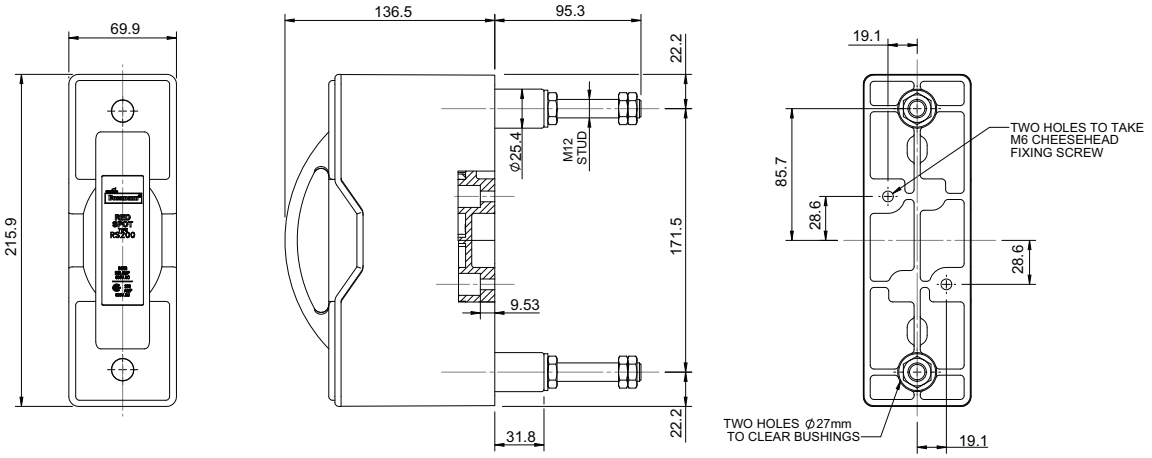



RS200P, 200 A, Back stud connected

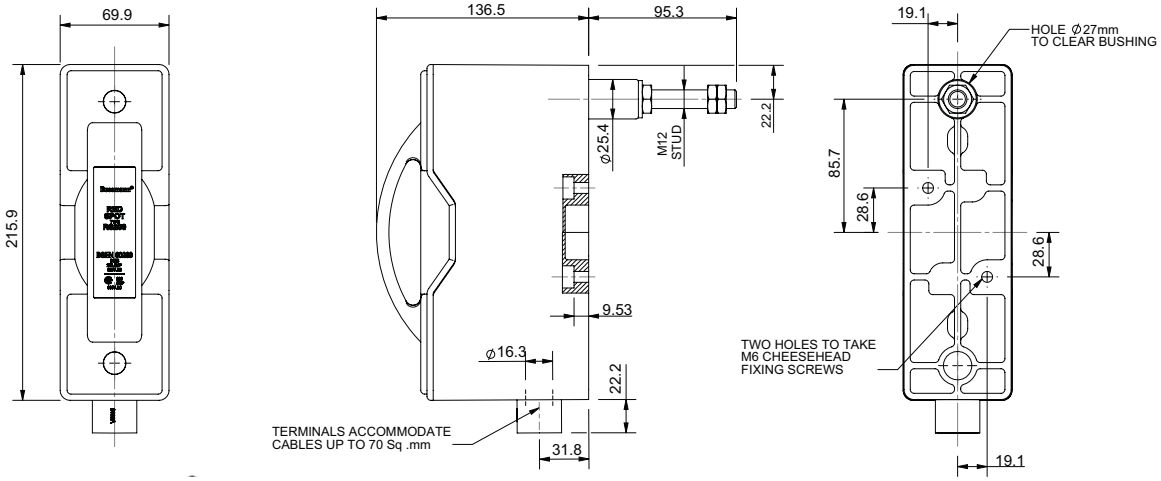



RS200PH, 200 A, Front/Back stud connected

Dimensions - mm

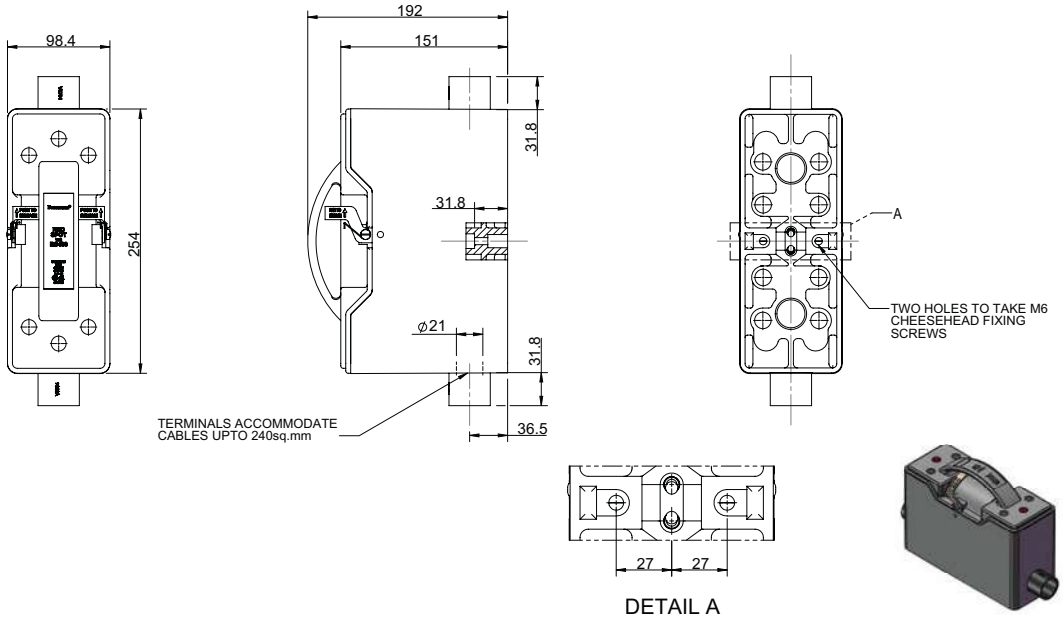

RS400H, 400 A, Front connected

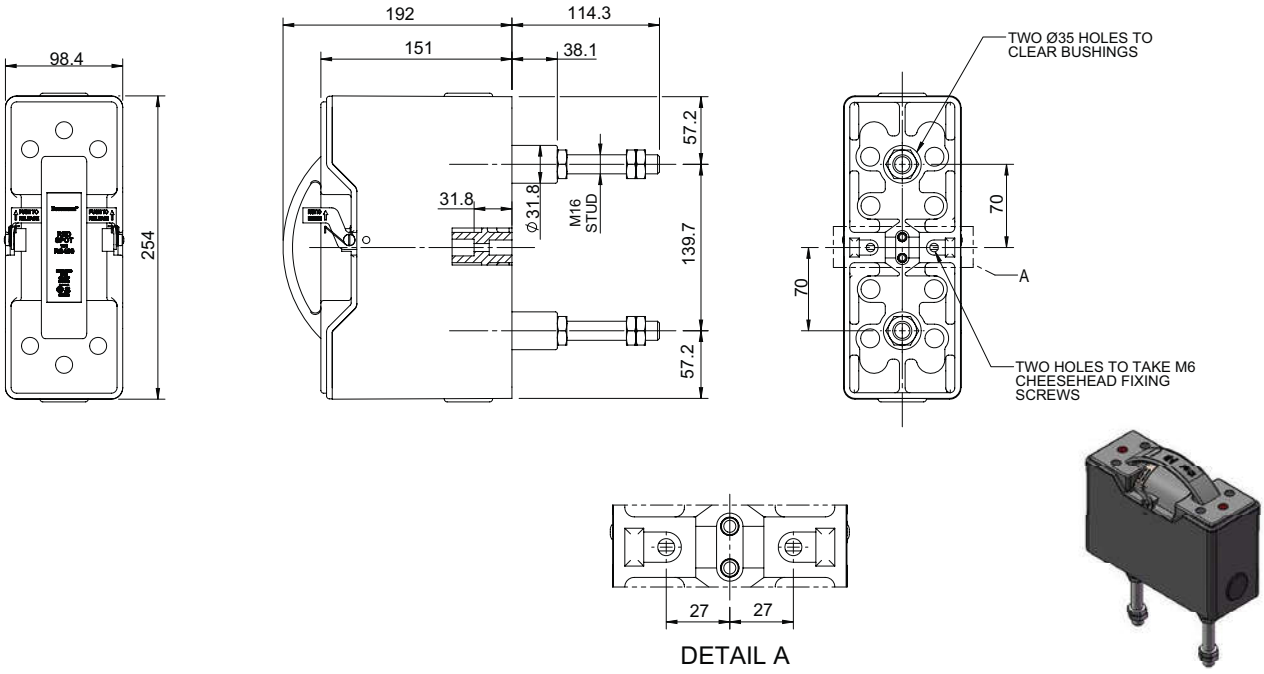

RS400P, 400 A, Back stud connected

Dimensions - mm

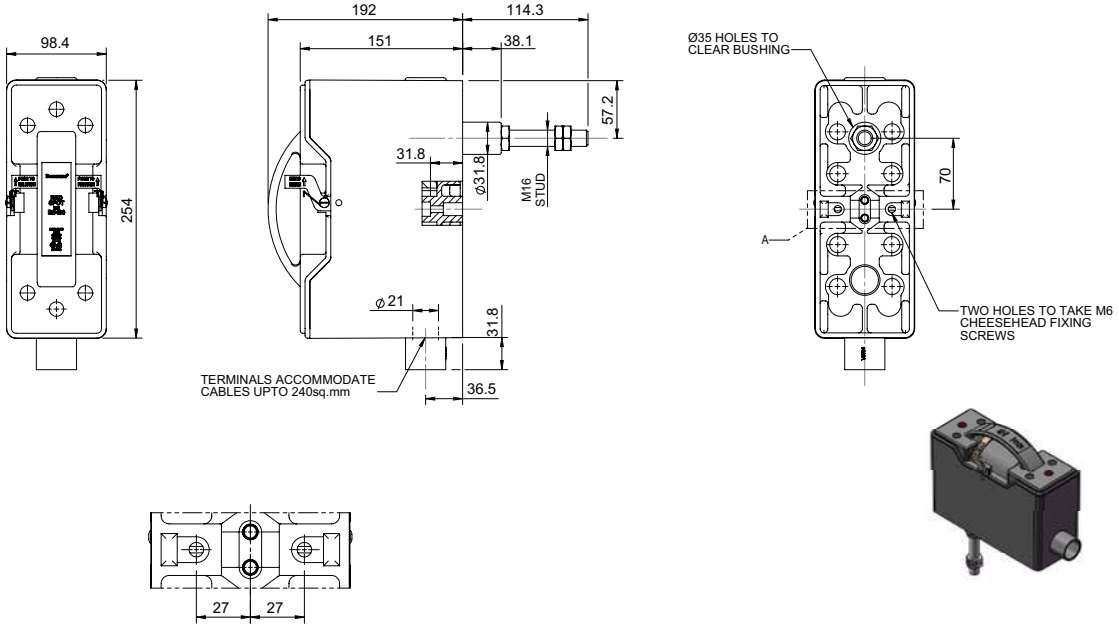

RS400PH, 400 A, Front/Back stud connected

Changes to the products, to the information contained in this document, and to prices are reserved; so are errors and omissions. Only order confirmations and technical documentation by Eaton is binding. Photos and pictures also do not warrant a specific layout or functionality. Their use in whatever form is subject to prior approval by Eaton. The same applies to Trademarks (especially Eaton, Moeller, and Cutler-Hammer). The Terms and Conditions of Eaton apply, as referenced on Eaton Internet pages and Eaton order confirmations.

Eaton
EMEA Headquarters
Route de la Longeraie 7
1110 Morges, Switzerland
Eaton.eu

© 2015 Eaton
All Rights Reserved
PDF only
Publication No. 10024
June 2015

Powering Business Worldwide

Eaton is a registered trademark.

All other trademarks are property of their respective owners.