HF (13.56 MHz)

BIS M-150-02/A
Order Code: BIS004F

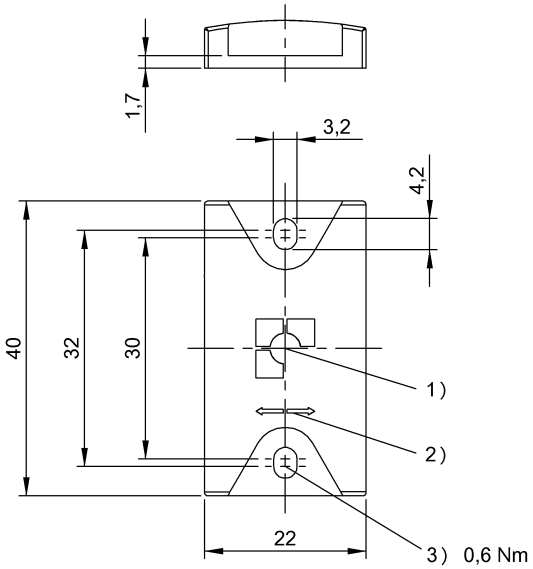

1) Sensing surface, 2) Read/write axis, 3) Tightening torque

Basic features

Antenna type	Rod
Approval/Conformity	CE WEEE EAC
EN 55022	Size 1, Cl. B
Principle of operation	Data carrier

Electrical data

Data retention time/years	≥ 10 at 55 °C
Memory organization	250 × 8 bits
Programming cycles	≥ 10.000.000.000
Programming time	for 16 bytes: 0.060s
Read cycles	Unlimited
Read time	for 16 bytes: 0.03 s User ID for 8 bytes: 0.02 s

Environmental conditions

Ambient temperature	-25...70 °C
Continuous shock load	yes
EN 60068-2-27, Shock	yes
EN 60068-2-32 Free fall	yes
EN 60068-2-6, Vibration	yes
IP rating	IP67
Storage temperature temporary	-25...130 °C 1x1000 h

Functional Characteristics

Memory type	FRAM
Supported data carrier types	DIN ISO 15693
UID serial number, read-only	8 Byte
User data, read/write	2000 Byte

Material

Housing material	PPS, GF40, With EP potting

Mechanical data

Application weight	8.00 g
Dimension	22 x 6.5 x 40 mm
Installation	metal-free (clear zone) on metal

Remarks

Values are under rated conditions unless otherwise specified.
Impact loading not permitted.
Only when used together with the appropriate read/write head.
For installation requirements see corresponding read/write head.
Time specification includes data check.
Installation type on flat steel
For attaching data carrier BIS Z-HW-002, order code: BAM01FT
Order accessories separately.
Mounting plate BIS Z-MP-001 Order code: BAM012M