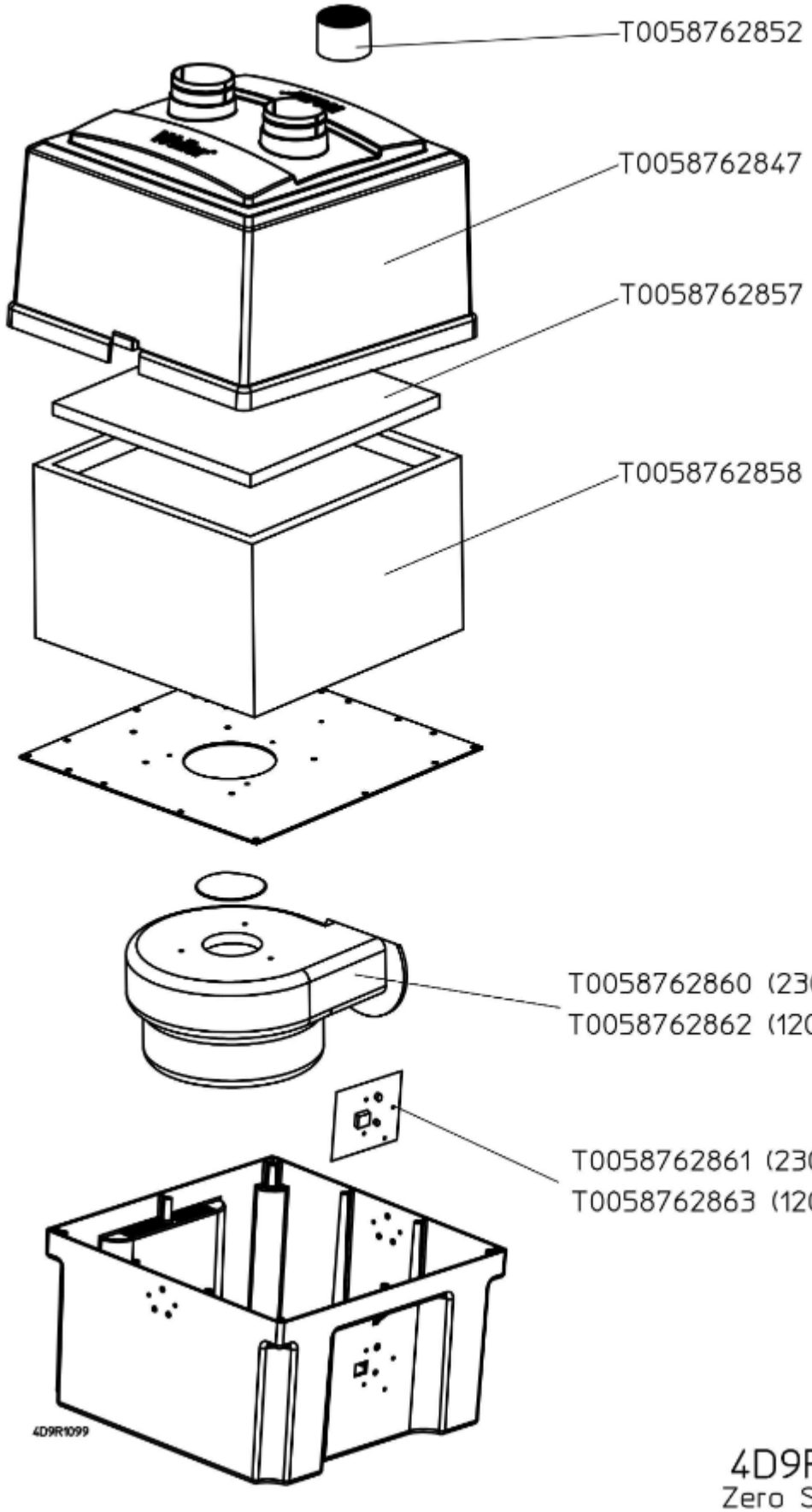


4D9R1099
Zero Smog TL