OEM Screw-in temperature sensor, Model TF35

Modelcode type: TF35

Item number: 48790756

OEM Screw-in temperature sensor, Model TF35	
Thermowell	
Thermowell material	Brass
Thermowell diameter [F1]	8,0 mm
Process connection [d6 o. E]	Male thread G3/8B
Insertion length [U1]	20 mm
Electrical connection	
Operating conditions	
Measuring range	-30...+130°C (-22...+266°F) Attention: Due to the compact design of the TF35 it is possible that the temperature at the plug rises to an inadmissibly high value. This must be taken into account when executing the measuring point.
static operating pressure	maximum 50 bar

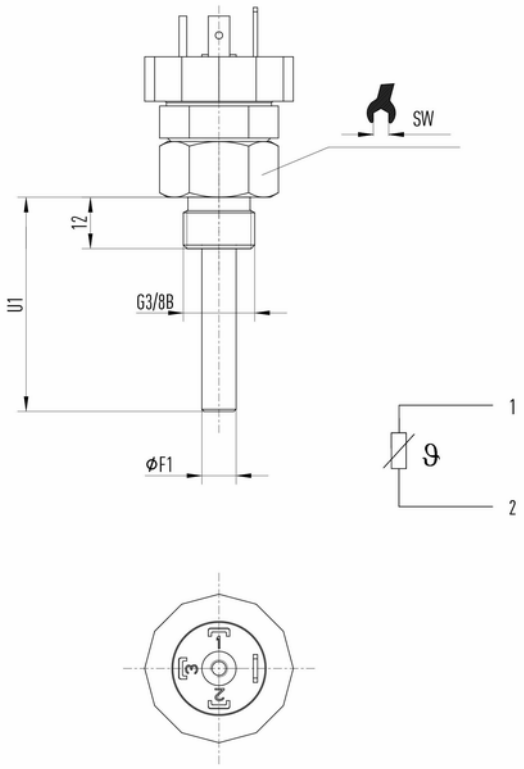

© Copyright by WIKA: Reproduction of this document is prohibited