KombiSIGN 71 / AndonCONTROL 860

AndonCONTROL BWM 100-240VAC BK



Part No.: 860.640.07

MECHANICAL DATA	
Height	55 mm
Diameter	136 mm
Materials	PA-GF PC/ABS
Dome colour	Black
Housing colour	Black
Protection category	IP20
Connection	Special version
Cable length	1800 mm
Tension relief	Pull-out protection
Type of fixing	Base mounting Wall mounting
Working temperature minimum	0°C
Working temperature maximum	+40°C
Weight with packaging	430 g
Product weight	380 g

ELECTRICAL DATA	
Operating voltage	115-230V
Operating voltage type	AC
Operating voltage frequency	50Hz at 230V 60Hz at 115V
Operating voltage tolerance	+/- 10%
Rated operational voltage	230 VAC
Rated operational current	1000 mA
Protection class	Protection class 2
Pollution degree	3
Overvoltage category	II
Isolation voltage	Ui = 250V; Uimp = 2.500V

APPROVAL DATA	
Conforms with CE	Yes
WEEE	Yes
Conforms with RED directive	Yes
Conforms with ATEX-directive	No
Conforms with CCC	No
Conforms with UL	No
Conforms with FCC	No
Conforms with IC	No

! For additional installation and mounting information, refer to the appropriate user guide at www.werma.com. This printed copy is for information only and is subject to alteration.

KombiSIGN 71 / AndonCONTROL 860

AndonCONTROL BWM 100-240VAC BK

EAC certificate available	Yes
Conforms with AS-I	No
ICAO Certification	No
Conforms with DNV	No
Conforms with RoHS CN	No
Conforms with VdS	No

DRAWING

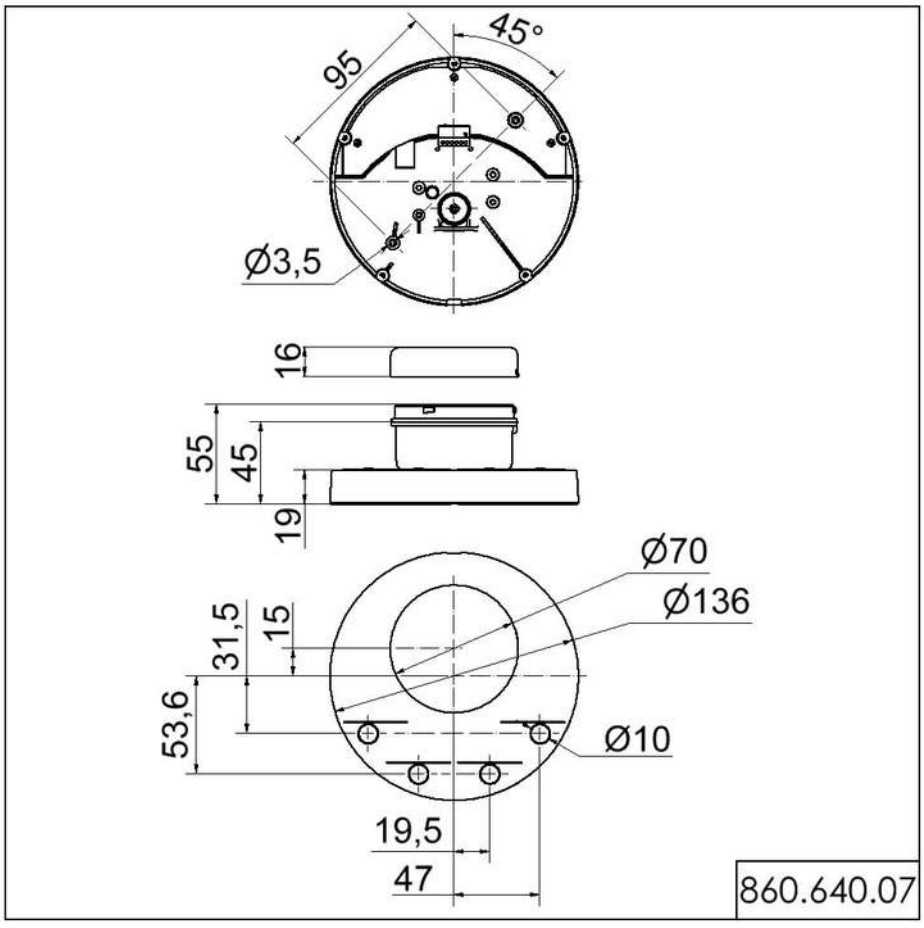

! For additional installation and mounting information, refer to the appropriate user guide at www.werma.com. This printed copy is for information only and is subject to alteration.