INSTALLATION INSTRUCTION

Terminal shroud

OTS40...125_

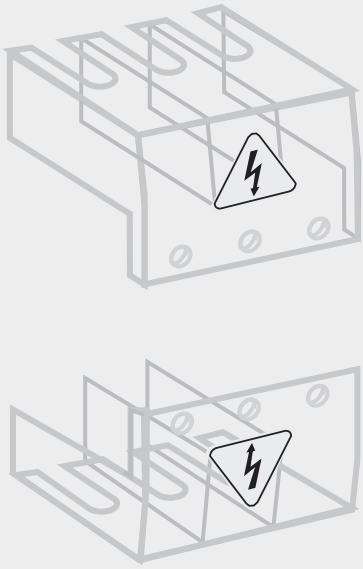

Terminal shroud
OTS40...125_

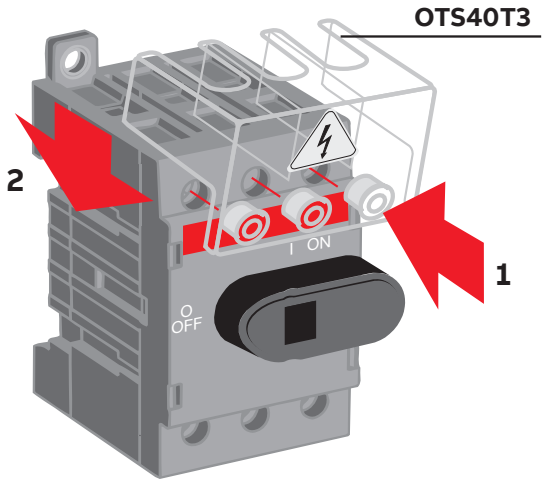

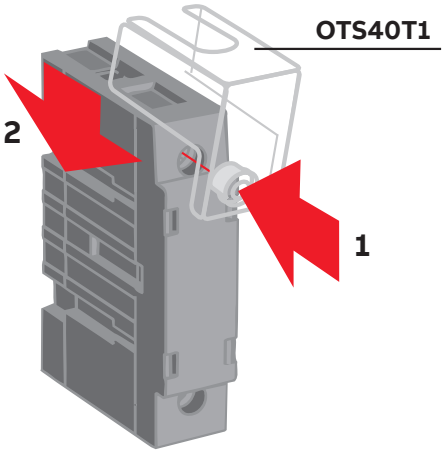

A06264A

Terminal shroud
OTS40...125_

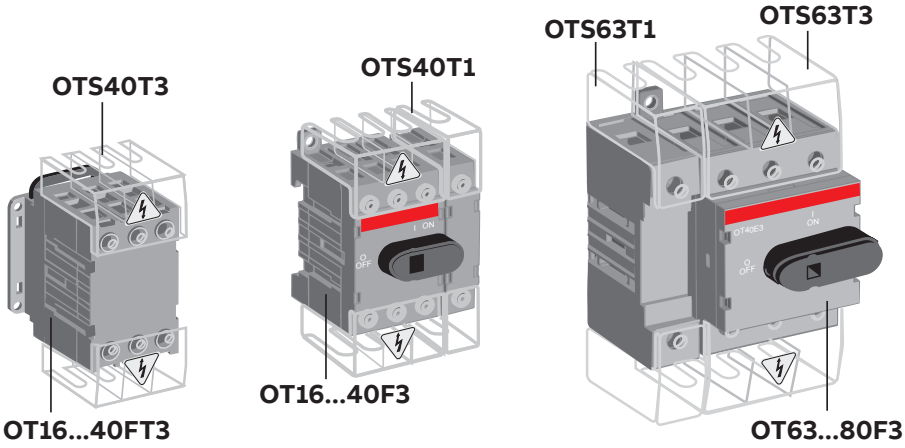

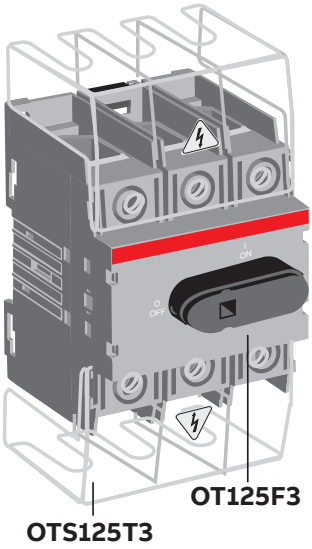

Listed for use with

OTS40T1:
OT16, -25, -40F4, -FT4
OTP_40FP, -FD

OTS40T3:
OT16, -25, -40F3, -FT3

OTS63T1:
OT63F4, -80F4, -63FT4, -80FT4
OTP_80FP, -FD

OTS63T3:
OT63F3, -80F3, -FT3

OTS125T1:
OT100F4, -125F4, -FT4
OTP_125FP, -FD

OTS125T3:
OT100F3, -125F3, -FT3

A06264B

Contact us

ABB Oy
P.O. Box 622
FI-65101 Vaasa
Finland

abb.com/lowvoltage

© Copyright 2019 ABB. All rights reserved.
Specifications subject to change without notice.

34 OTS40T3 rev. J / 1SCC390061M0008# 15.7.2019