Brand of NTN corporation

Technical data

UCT212CC

Bearing units



Grey cast housing, radial insert ball bearing with socket set screws,seal with slinger

KIT CONTENT

UC212G2, SCC212, SCO212-60, T212N

VISUAL (S)

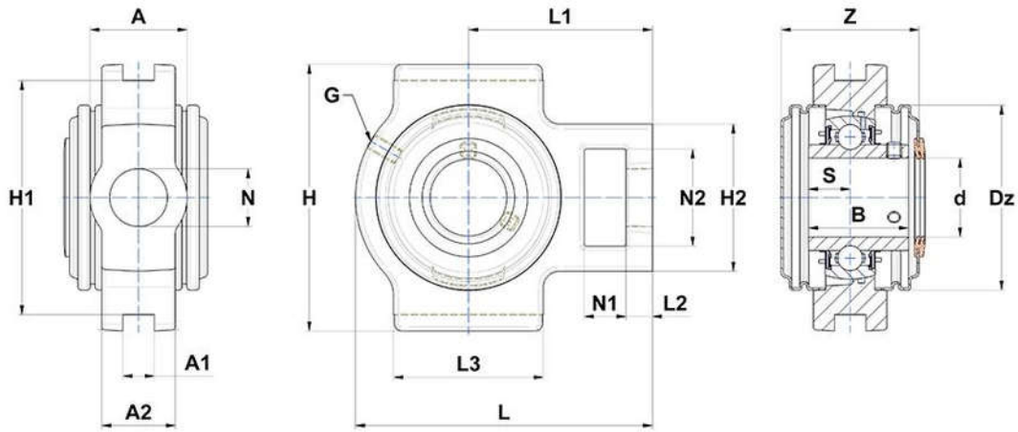

PRODUCT DEFINITION

Brand	SNR
A - Housing width	64 mm
A1 - Width of location slot	22 mm
A2	42 mm
B - Width of Inner Ring	65,1 mm
d - Shaft diameter	60 mm

NTN Europe
1 rue des Usines · BP 2017 · 74010 Annecy Cedex · France · Tel. +33 (0)4 50 65 30 00
S.A. au capital de 322 639 919 € · RCS ANNECY B 325 821 072 · Id. Fiscale : FR 48 325 821 072
SIRET 325 821 072 00015 · Code APE 2815 Z · Code NACE 28.15

PRODUCT DEFINITION	
Dz - Outer diameter of cover	120 mm
G - Grease fitting	M6x1
H - Housing length, width or diameter	146 mm
H1 - Distance between location slots	130 mm
H2 - Housing height / width	102 mm
L - Housing length	194 mm
L1 - Distance attachment end face to bearing centerline	119 mm
L2 - Thickness of attachment end	19 mm
L3 - Length of guidance slot/face	102 mm
N - Mounting hole dimension	35 mm
N1 - Length of attachment slot	32 mm
N2 - Height of attachment slot	64 mm
S - Distance front side/bearing centre	25,4 mm
Z - Width over covers	90 mm

PRODUCT PERFORMANCE	
C - Dynamic load rating	52500000 mN
C0 - Static load rating	32800000 mN
Operating temperature min.	253,15 °K
Operating temperature max.	373,15 °K

OTHER FEATURES	
Mass	4,96 kg
Recommended tightening torque for set screw	22 N-m