Photoelectric sensor

BOS 23K-PA-LH10-S4
BOS01FR

BALLUFF
sensors worldwide

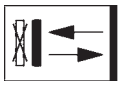



LASER CLASS 1 per IEC 60825-1:
2003-10

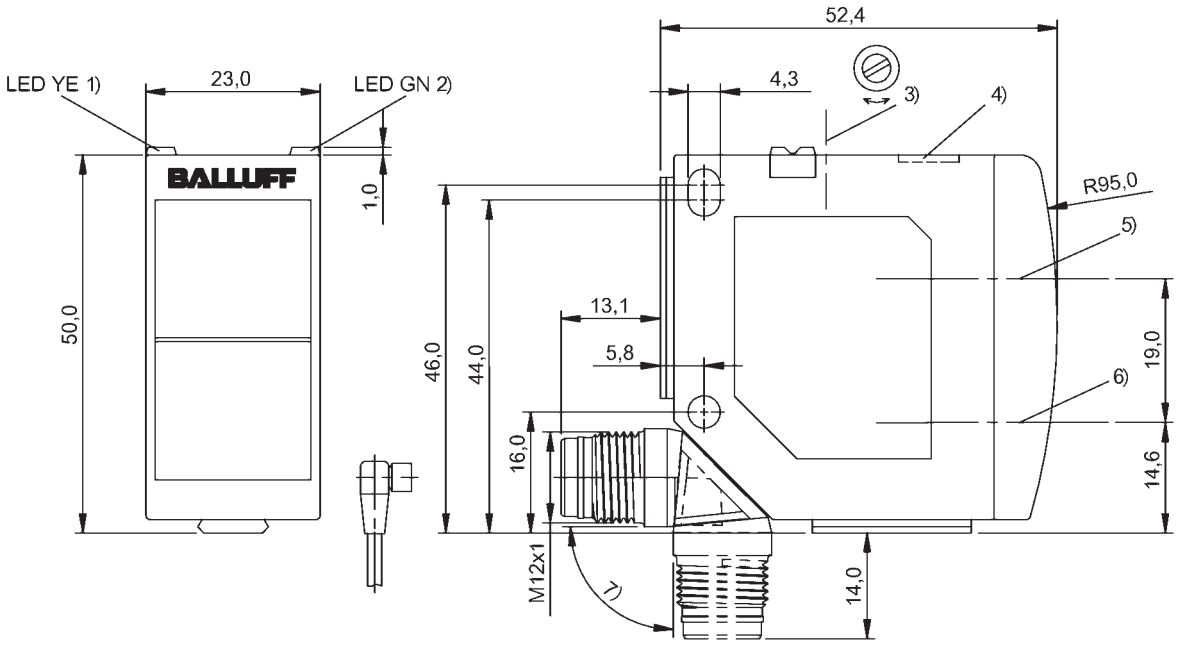

1) Output function/error 2) Power 3) Sn 4) No. of bars/sens. distance 5) Optical axis receiver 6) Optical axis emitter 7) 270° rotatable

- **Photoelectric sensor**
- **Series 23K**
- **Laser red light**
- **up to 1 m**

General attributes

Adjuster	Adjusting screw (1x)
Approvals / Conformity	CE Ecolab
Basic standard	IEC 60947-5-2
Enclosure Type DIN 40050	IPx9K
Enclosure Type per IEC 60529	IP6x
Indicator	Output function - LED YE Power - LED GN Error - LED YE, flash. Switching dist. - bar display
Polarity reversal protected	yes
Protection Class	II
Series	Series 23K
Setting	Switching distance (Sn)
Short circuit protected	yes

Electrical attributes

Connection type	Connector
Eff. operating current Ie	100 mA
Eff. operating voltage Ue DC	24.0 V
Electrical version	DC, direct current
No-load current max. Io at Ue	30 mA
Operating voltage UB max. DC [V]	30.0 V
Operating voltage UB min. DC [V]	12.0 V
Rated insulation voltage Ui	75 V DC
Ripple max. (% of Ue)	10 %
Switching freq. f max. (at Ue)	1000 Hz
Switching function	NO-NC
Switching output	PNP (2x)
Turn on time ton max.	0.50 ms
Voltage drop Ud max. (at Ie)	2.0 V

Mechanical attributes

Ambient temperature Ta max.	60 °C
Ambient temperature Ta min.	-20 °C
Border range energetically	1200 mm
Connector type	M12x1-S04
Detection range Sd	5...800 mm
Dist. dev. 18 % max. (% of Sr)	30 %
Eff. operating distance Sr	800 mm
Housing material	PC-ABS
Length 1	23.0 mm
Length 2	52.4 mm
Length 3	51.0 mm
Minimum operating distance	5 mm
Mounting type	Screw M4
Range Sn	Sn = 800 mm, adjustable
Sensing face material	PMMA
Style	Block, rotatable connection
Tightening torque max.	1.5 Nm

Optical attributes

Average power Po max.	< 390 µW (IEC 60825-1)
Laser Class per IEC 60825-1	1
Light spot size, typical	0.9 mm x 0.6 mm at focal point
Light type	Laser red light
Optical special feature	Background suppression

Internet www.balluff.com
Balluff Germany +49 (0) 7158 173-0, 173-370
Balluff USA 1-800-543-8390
Balluff China +86 (0) 21-50 644131

For definitions of terms, see main catalog
Subject to change

Principle of optical operation	Light scanner, triangulation
Switching function, optical	NO-NC: light-dark /dark-light
Wavelength	655 nm

Additional text
Reference object (target): Gray card, 200 x 200,

90 % remission, axial approach.
For additional information, refer to user's guide.
Order accessories separately.
The sensor is functional again after the overload has been eliminated.

