E11030

Lock nut for mounting adapter

NUT MOUNTING ADAPTER PVDF

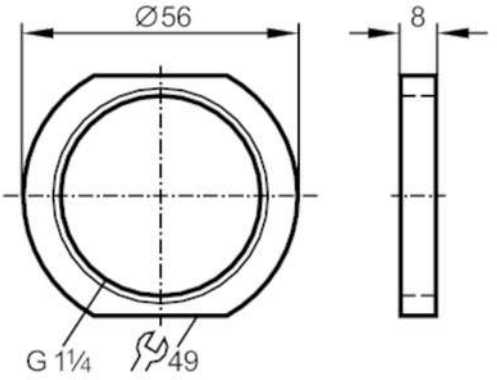

Application		
Design		for mounting adapters
Operating conditions		
Ambient temperature	[°C]	-25...110
Mechanical data		
Weight	[g]	15.8
Dimensions	[mm]	G 1¼
Thread designation		G 1¼
External diameter	[mm]	56
Materials		PVDF
Remarks		
Pack quantity		1 pcs.