PV8004

Pressure switch with IO-Link

PV-010-REG14-UFRVG/US/ /

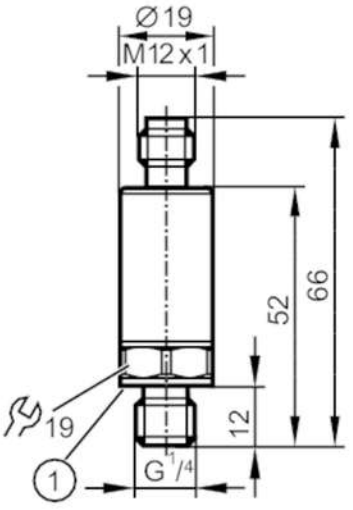

1 Sealing

Product characteristics			
Number of inputs and outputs	Number of digital outputs: 2		
Measuring range	-1...10 bar	-14.5...145 psi	-0.1...1 MPa
Process connection	threaded connection G 1/4 external thread (DIN EN ISO 1179-2); internal thread:M5		
Application			
Measuring element	metallic thin film cell		
Application	for industrial applications		
Media	liquids and gases		
Medium temperature [°C]	-40...90		
Min. bursting pressure	300 bar	4350 psi	30 MPa
Pressure rating	25 bar	360 psi	2.5 MPa
Note on pressure rating	static		
Vacuum resistance	-1000 mbar	-0.1 MPa	
Type of pressure	relative pressure		
Electrical data			
Operating voltage [V]	18...30 DC		
Current consumption [mA]	< 15		
Min. insulation resistance [MΩ]	100; (500 V DC)		
Protection class	III		
Reverse polarity protection	yes		
Power-on delay time [s]	< 0.3		
Inputs / outputs			
Number of inputs and outputs	Number of digital outputs: 2		
Outputs			
Total number of outputs	2		
Output signal	switching signal; IO-Link; (configurable)		
Electrical design	PNP/NPN		
Number of digital outputs	2		

PV8004

Pressure switch with IO-Link

PV-010-REG14-UFRVG/US/ /

Output function	normally open / normally closed; (parameterisable)	
Max. voltage drop switching output DC [V]	2	
Permanent current rating of switching output DC [mA]	100	
Switching frequency DC [Hz]	< 130	
Short-circuit protection	yes	
Type of short-circuit protection	pulsed	
Overload protection	yes	
Measuring/setting range		
Measuring range	-1...10 bar	-14.5...145 psi / -0.1...1 MPa
Set point SP	-0.9...10 bar	-13.1...145 psi / -0.09...1 MPa
Reset point rP	-0.949...9.951 bar	-13.8...144.3 psi / -0.0949...0.9951 MPa
In steps of	0.001 bar	0.1 psi / 0.0001 MPa
Factory setting	SP1 = 2.5 bar	rP1 = 2.3 bar / ou1 = Hno;
	SP2 = 7.5 bar	rP2 = 7.3 bar / ou2 = Hno;
	dS1/dS2 = 0 ms	dr1/dr2 = 0 ms
	coF = 0 %	P-n = PnP / dAP= 60 ms
Temperature monitoring		
Measuring range	-40...90 °C	-40...194 °F
Set point SP	-38...90 °C	-36.4...194 °F
Reset point rP	-40...88 °C	-40...19.4 °F
In steps of	0.1 °C	0.1 °F
Accuracy / deviations		
Switch point accuracy [% of the span]	< ± 0,5 (nach DIN EN 61298-2)	
Repeatability [% of the span]	< ± 0,05; (with temperature fluctuations < 10 K)	
Characteristics deviation [% of the span]	< ± 0,5; (linearity incl. hysteresis and repeatability, limit value setting to DIN EN IEC 62828-1)	
Linearity deviation [% of the span]	< ± 0,1 (BFSL) / < ± 0,2 (LS)	
Hysteresis deviation [% of the span]	< ± 0,2	
Long-term stability [% of the span]	< ± 0,1; (per 6 months)	
Temperature coefficient zero point [% of the span / 10 K]	< 0,1 (-25...90 °C) / < 0,2 (-40...-25 °C)	
Temperature coefficient span [% of the span / 10 K]	< 0,1 (-25...90 °C) / < 0,2 (-40...-25 °C)	
Temperature monitoring		
Accuracy [K]	± 2 K + (0.1 x (ambient temperature - medium temperature))	
Notes on the accuracy / deviation	temperature range -10 to 80 °C	
Response times		
Response time [ms]	< 3	

PV8004

Pressure switch with IO-Link

PV-010-REG14-UFRVG/US/ /

Temperature monitoring			
Dynamic response T05 / T09	[s]	< 80 / < 210 (under ifm reference conditions)	
Software / programming			
Parameter setting options		hysteresis / window; normally open / normally closed; switching logic; switch-on/switch-off delay; Damping	
Interfaces			
Communication interface		IO-Link	
Transmission type		COM2 (38,4 kBaud)	
IO-Link revision		1.1	
SDCI standard		IEC 61131-9	
Profiles		Identification and Diagnosis (0x4000), Measurement Data Channel (0x800A)	
SIO mode		yes	
Required master port type		A	
Process data analogue		5	
Process data binary		2	
Min. process cycle time	[ms]	4.5	
IO-Link resolution pressure	[bar]	0.005	
IO-Link resolution temperature	[K]	0.2	
IO-Link process data (cyclical)		**function**	**bit length**
		pressure	16
		temperature	16
		device status	4
		binary switching information	2
IO-Link functions (acyclical)		application specific tag; internal temperature; operating hours counter; switching cycles counter; Pressure peak counter; Temperature peak counter	
Supported DeviceIDs		**Type of operation**	**DeviceID**
		default	1210
Operating conditions			
Ambient temperature	[°C]	-40...90	
Storage temperature	[°C]	-40...100	
Protection		IP 67; IP 69K	
Tests / approvals			
EMC		DIN EN 61326-1	
Shock resistance		DIN EN 60068-2-27	500 g (1 ms)
Vibration resistance		DIN EN 60068-2-6	20 g (10...2000 Hz)
MTTF	[years]	668	
UL approval		UL Approval no.	J037
		File number UL	E174189
Pressure Equipment Directive		Sound engineering practice; can be used for group 2 fluids; group 1 fluids on request	
Mechanical data			
Weight	[g]	53.5	
Housing		cylindrical	
Dimensions	[mm]	Ø 19 / L = 66	
Materials		stainless steel (630/1.4542/17-4 PH); stainless steel (316L/1.4404); PEI	

PV8004

Pressure switch with IO-Link

PV-010-REG14-UFRVG/US/ /

Materials (wetted parts)		stainless steel (303/1.4305); stainless steel (630/1.4542/17-4 PH)
Min. pressure cycles		60 million; (at 1.2 times nominal pressure)
Tightening torque	[Nm]	25...35; (recommended tightening torque; depends on lubrication, seal and pressure rating)
Process connection		threaded connection G 1/4 external thread (DIN EN ISO 1179-2); internal thread:M5
Process connection sealing		FKM (DIN EN ISO 1179-2)
Restrictor element integrated		yes

Remarks

Remarks	BFSL = Best Fit Straight Line
	LS = limit value setting
Pack quantity	1 pcs.

Electrical connection

Connector: 1 x M12; coding: A



Connection

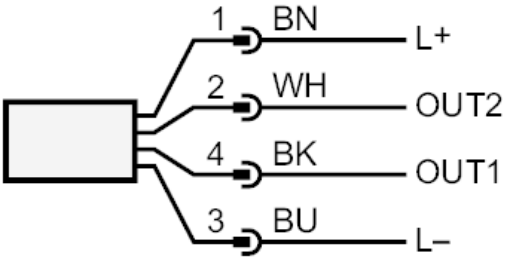

OUT1	switching output pressure
	IO-Link
OUT2	switching output pressure / temperature
	colours to DIN EN 60947-5-2
	Core colours :
BK =	black
BN =	brown
BU =	blue
WH =	white