TI00138R/09/EN/07.21-00
71551070
2021-11-20

Technical Information
iTEMP TMT84

Dual-input temperature transmitter



with PROFIBUS® PA protocol

Application

- Temperature transmitter with 2 universal input channels and PROFIBUS® PA protocol for the conversion of different input signals into digital output signals
- The iTEMP TMT84 is characterized by its reliability, long-term stability, high precision and advanced diagnostic function (important in critical processes)
- For the highest level of safety, reliability and risk reduction
- Universal input for resistance thermometers (RTD), thermocouples (TC), resistance transmitters (Ω), voltage transmitters (mV)
- Installation in terminal head form B (flat face) as per DIN EN 50446
- Optional: Installation in field housing for Ex d applications

Your benefits

- Easy and standardized communication via PROFIBUS® PA Profile 3.02
- Straightforward design of measuring points in explosive atmospheres owing to FISCO/FNICO conformity in accordance with IEC 600079-27
- Safe operation in hazardous areas thanks to international approvals
- High accuracy of measuring point through sensor-transmitter matching
- Reliable operation with sensor monitoring and device hardware fault recognition
- Rapid no-tools wiring due to optional spring terminal technology

Endress+Hauser
People for Process Automation

Function and system design

Measuring principle

Electronic recording and conversion of various input signals in industrial temperature measurement.

Measuring system

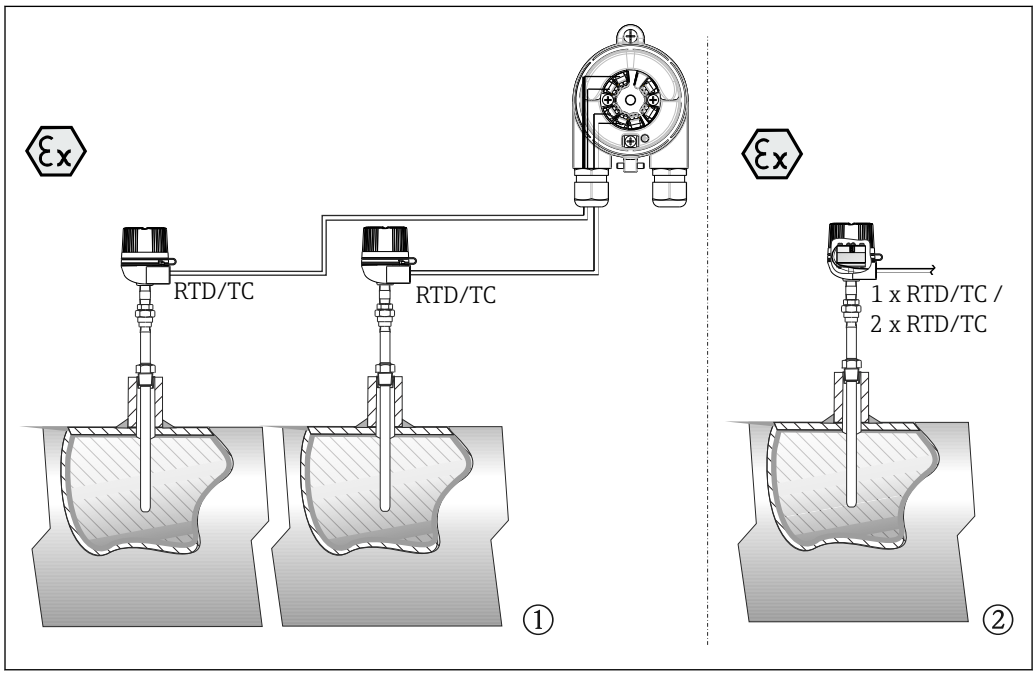

1 Application examples

1 Two sensors with measuring input (RTD or TC) in remote installation with the following advantages: drift warning, sensor backup function and temperature-dependent sensor switching
2 Integrated transmitter - 1 x RTD/TC or 2 x RTD/TC for redundancy

Endress+Hauser offers a comprehensive range of industrial thermometers with resistance sensors or thermocouples.

When combined with the temperature transmitter, these components form a complete measuring point for a wide range of applications in the industrial sector.

The temperature transmitter is a 2-wire device with two measuring inputs. The device not only transfers converted signals from resistance thermometers and thermocouples, it also transfers resistance and voltage signals using PROFIBUS® PA communication. The device is powered via the PROFIBUS® PA bus and can be installed as an intrinsically safe apparatus in Zone 1 hazardous areas. The device is used for instrumentation purposes in the terminal head, form B (flat face), according to DIN EN 50446. Data transfer is via 4 Analog Input (AI) function blocks.

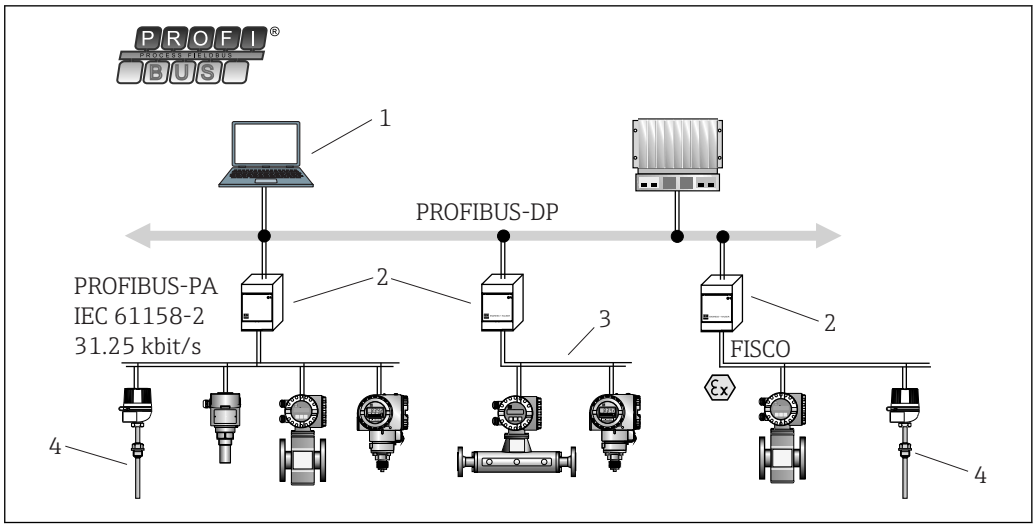

2 *Equipment architecture for PROFIBUS® PA communication*

1 Visualization and monitoring e.g. P View, FieldCare and diagnostic software
2 Segment coupler
3 32 devices per segment
4 Measuring point with installed transmitter

Standard diagnostic functions

- Cable break, short-circuit, corrosion of sensor cables
- Incorrect wiring
- Internal device errors
- Overrange/underrange detection
- Ambient temperature out-of-range detection

Corrosion detection as per NAMUR NE89

Corrosion of the sensor connection cables can cause incorrect measured value readings. The transmitter offers the possibility of detecting any corrosion of thermocouples, mV transmitters and resistance thermometers, Ohm transmitters with 4-wire connection before a measured value is corrupted. The transmitter prevents incorrect measured values from being read out and can issue a warning via the PROFIBUS® protocol if wire resistance values exceed plausible limits.

Low voltage detection

The low voltage detection function prevents the device from continuously transmitting an incorrect analog output value (caused by an incorrect or damaged power supply system or a damaged signal cable). If the supply voltage drops below the required value, the analog output value drops to < 3.6 mA for approx. 5 s. The device then tries to output the normal analog output value again. If the supply voltage is still too low, this process is repeated cyclically.

2-channel functions

These functions increase the reliability and availability of the process values:
- Sensor backup switches to the second sensor if the primary sensor fails
- Drift warning or alarm if the deviation between sensor 1 and sensor 2 is less than or greater than a predefined limit value
- Temperature-dependent switching between sensors which are used in different measuring ranges
- Mean value or differential measurement from two sensors
- Mean value measurement with sensor redundancy

Compatibility with previous model iTEMP TMT184

When the device replaces the previous model, the TMT84 ensures the compatibility of the data. The head transmitter automatically identifies the device configured in the automation system (previous TMT184 model) and makes the same input and output data and measured value status information available for cyclic data exchange.

Please note the following:

- Only PROFIBUS® PA Profile 3.0 is supported
- Only 1-channel operation is possible
- Diagnostics and status handling are the same as in the previous TMT184 model
- Software locking from the previous TMT184 model is not adopted in the new model

Input

Measured variable

Temperature (temperature-linear transmission behavior), resistance and voltage.

Measuring range

Two independent sensors can be connected. The measuring inputs are not galvanically isolated from each other.

Resistance thermometer (RTD) as per standard	Designation	α	Measuring range limits
IEC 60751:2008	Pt100 (1) Pt200 (2) Pt500 (3) Pt1000 (4)	0.003851	−200 to +850 °C (−328 to +1 562 °F) −200 to +850 °C (−328 to +1 562 °F) −200 to +250 °C (−328 to +482 °F) −200 to +250 °C (−328 to +482 °F)
JIS C1604:1984	Pt100 (5)	0.003916	−200 to +649 °C (−328 to +1 200 °F)
DIN 43760 IPTS-68	Ni100 (6) Ni1000	0.006180	−60 to +250 °C (−76 to +482 °F) −60 to +150 °C (−76 to +302 °F)
Edison Copper Winding No. 15	Cu10	0.004274	−100 to +260 °C (−148 to +500 °F)
Edison Curve	Ni120	0.006720	−70 to +270 °C (−94 to +518 °F)
GOST 6651-94	Pt50 (8) Pt100 (9)	0.003910	−200 to +1 100 °C (−328 to +2 012 °F) −200 to +850 °C (−328 to +1 562 °F)
OIML R84: 2003 GOST 6651-2009	Cu50 (10) Cu100 (11)	0.004280	−200 to +200 °C (−328 to +392 °F)
-	Pt100 (Callendar van Dusen) Nickel polynomial Copper polynomial	-	10 to 400 Ω, 10 to 2 000 Ω 10 to 400 Ω, 10 to 2 000 Ω 10 to 400 Ω, 10 to 2 000 Ω
	▪ Type of connection: 2-wire, 3-wire or 4-wire connection, sensor current: ≤ 0.3 mA ▪ With 2-wire circuit, compensation of wire resistance possible (0 to 30 Ω) ▪ With 3-wire and 4-wire connection, sensor wire resistance up to max. 50 Ω per wire		
Resistance transmitter	Resistance Ω		10 to 400 Ω 10 to 2 000 Ω

Thermocouples as per standard	Designation	Measuring range limits	
IEC 60584, Part 1	Type A (W5Re-W20Re) (30) Type B (PtRh30-PtRh6) (31) Type E (NiCr-CuNi) (34) Type J (Fe-CuNi) (35) Type K (NiCr-Ni) (36) Type N (NiCrSi-NiSi) (37) Type R (PtRh13-Pt) (38) Type S (PtRh10-Pt) (39) Type T (Cu-CuNi) (40)	0 to +2 500 °C (+32 to +4 532 °F) +40 to +1 820 °C (+104 to +3 308 °F) −270 to +1 000 °C (−454 to +1 832 °F) −210 to +1 200 °C (−346 to +2 192 °F) −270 to +1 372 °C (−454 to +2 501 °F) −270 to +1 300 °C (−454 to +2 372 °F) −50 to +1 768 °C (−58 to +3 214 °F) −50 to +1 768 °C (−58 to +3 214 °F) −260 to +400 °C (−436 to +752 °F)	Recommended temperature range: 0 to +2 500 °C (+32 to +4 532 °F) +500 to +1 820 °C (+932 to +3 308 °F) −150 to +1 000 °C (−238 to +1 832 °F) −150 to +1 200 °C (−238 to +2 192 °F) −150 to +1 200 °C (−238 to +2 192 °F) −150 to +1 300 °C (−238 to +2 372 °F) +50 to +1 768 °C (+122 to +3 214 °F) +50 to +1 768 °C (+122 to +3 214 °F) −150 to +400 °C (−238 to +752 °F)
IEC 60584, Part 1; ASTM E988-96	Type C (W5Re-W26Re) (32)	0 to +2 315 °C (+32 to +4 199 °F)	0 to +2 000 °C (+32 to +3 632 °F)
ASTM E988-96	Type D (W3Re-W25Re) (33)	0 to +2 315 °C (+32 to +4 199 °F)	0 to +2 000 °C (+32 to +3 632 °F)
DIN 43710	Type L (Fe-CuNi) (41) Type U (Cu-CuNi) (42)	−200 to +900 °C (−328 to +1 652 °F) −200 to +600 °C (−328 to +1 112 °F)	−150 to +900 °C (−238 to +1 652 °F) −150 to +600 °C (−238 to +1 112 °F)

Thermocouples as per standard	Designation	Measuring range limits	
GOST R8.585-2001	Type L (NiCr-CuNi) (43)	−200 to +800 °C (−328 to +1 472 °F)	−200 to +800 °C (+328 to +1 472 °F)
	▪ Internal reference junction (Pt100) ▪ External preset value: configurable value −40 to +85 °C (−40 to +185 °F) ▪ Maximum sensor wire resistance 10 kΩ (If the sensor wire resistance is greater than 10 kΩ, an error message is output in accordance with NAMUR NE89.)		
Voltage transmitter (mV)	Millivolt transmitter (mV)	−20 to 100 mV −5 to 30 mV	

Type of input

The following connection combinations are possible when both sensor inputs are assigned:

		Sensor input 1			
		RTD or resistance transmitter, two-wire	**RTD or resistance transmitter, three-wire**	**RTD or resistance transmitter, four-wire**	**Thermocouple (TC), voltage transmitter**
Sensor input 2	**RTD or resistance transmitter, two-wire**	☑	☑	-	☑
	RTD or resistance transmitter, three-wire	☑	☑	-	☑
	RTD or resistance transmitter, four-wire	-	-	-	-
	Thermocouple (TC), voltage transmitter	☑	☑	☑	☑

Input signal

Input data: The head transmitter is able to receive a cyclic value and its status sent by a PROFIBUS® master. This value can be read acyclically.

Output

Output signal

- PROFIBUS® PA in accordance with EN 50170 Volume 2, IEC 61158-2 (MBP), galvanically isolated
  Amendment 2 “Condensed status and diagnostic messages”
  Amendment 3 “Identification and Maintenance Functions”
- Failure current FDE (Fault Disconnection Electronic) = 0 mA
- Data transmission rate, supported baudrate: 31.25 kBit/s
- Signal encoding = Manchester II
- Output data:
  Available values via AI blocks: temperature (PV), temp sensor 1 + 2, terminal temperature
- In a control system, the transmitter always operates as a slave and, depending on the application, enables data exchange with one or more masters.
- According to IEC 60079-27, FISCO/FNICO

Failure information

Status messages and alarms in accordance with PROFIBUS® PA Profile 3.01/3.02 specification

Linearization/transmission behavior

Temperature-linear, resistance-linear, voltage-linear

Mains filter

50/60 Hz

Galvanic isolation

U = 2 kV AC (input/output)

Current consumption

≤ 11 mA

Switch-on delay

8 s

PROFIBUS® PA basic data

Manufacturer-specific ID no.:	Profile 3.0 ID No.:	Manufacturer-specific GSD
1551 (hex)	9700 (hex) 9701 (hex) 9702 (hex) 9703 (hex)	EH021551.gsd (Profile 3.01 EH3x1551.gsd)
Profile 3.0 GSD	Device or bus address	Bitmaps
Pa139700.gsd Pa139701.gsd Pa139702.gsd Pa139703.gsd	126 (default)	EH_1551_d.bmp EH_1551_n.bmp EH_1551_s.bmp

If the TMT84 is operating in compatibility mode, the device reports the manufacturer-specific ID No.: 1523 (hex) - TMT184 during cyclic data transfer.

Brief description of the blocks

Physical Block

The Physical Block contains all the data that clearly identify and distinguish the device. It is like an electronic version of the device nameplate. In addition to parameters that are needed to operate the device on the fieldbus, the Physical Block makes information available, such as the order code, device ID, hardware revision, software revision, device release, etc. The Physical Block can also be used to configure the display.

Transducer Block "Sensor 1" and "Sensor 2"

The Transducer Blocks of the head transmitter contain all the measurement-specific and device-specific parameters which are relevant for the measurement of the input variables.

Analog Input (AI)

In the AI function block, the process variables from the Transducer Blocks are prepared for subsequent automation functions in the control system (e.g. scaling, limit value processing).

Power supply

Supply voltage

U = 9 to 32 V DC, polarity-independent (max. voltage U_b = 35 V)

Electrical connection

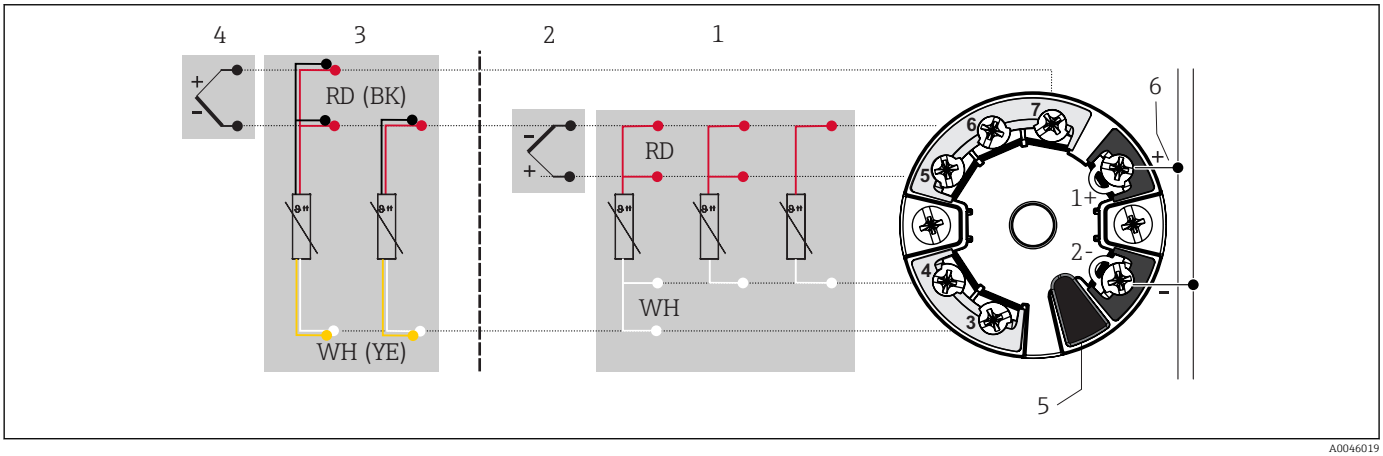

3 *Assignment of terminal connections for head transmitter*

1 *Sensor input 1, RTD and Ω, 2-, 3- and 4-wire*
2 *Sensor input 1, TC and mV*
3 *Sensor input 2, RTD and Ω, 2- and 3-wire*
4 *Sensor input 2, TC and mV*
5 *Display connection, service interface*
6 *Bus terminator and power supply*

Terminals

Choice of screw or push-in terminals for sensor and supply cables:

Terminal design	Cable design	Cable cross-section
Screw terminals (with tabs on the fieldbus terminals for easy connection of a handheld terminal, e.g. FieldXpert, FC475, Trex)	Rigid or flexible	≤ 2.5 mm² (14 AWG)
Push-in terminals (cable design, stripping length = min. 10 mm (0.39 in)	Rigid or flexible	0.2 to 1.5 mm² (24 to 16 AWG)
	Flexible with wire end ferrules with/without plastic ferrule	0.25 to 1.5 mm² (24 to 16 AWG)

Wire end ferrules must be used with push-in terminals and when using flexible wires with a cable cross-section of ≤ 0.3 mm². Otherwise it is recommended not to use wire end ferrules when connecting flexible cables to push-in terminals.

Performance characteristics

Response time

1 s per channel

Reference operating conditions

- Calibration temperature: +25 °C ±5 K (77 °F ±9 °F)
- Supply voltage: 24 V DC
- 4-wire circuit for resistance adjustment

Resolution

Resolution of A/D converter = 18 bit

Maximum measured error

In accordance with DIN EN 60770 and the reference conditions specified above. The measured error data correspond to ±2 σ (Gaussian distribution). The data include non-linearities and repeatability.

Typical

Standard	Designation	Measuring range	Typical measured error (±)
Resistance thermometer (RTD) as per standard			Digital value [1]
IEC 60751:2008	Pt100 (1)	0 to +200 °C (32 to +392 °F)	0.08 °C (0.14 °F)
IEC 60751:2008	Pt1000 (4)		0.08 K (0.14 °F)
GOST 6651-94	Pt100 (9)		0.07 °C (0.13 °F)
Thermocouples (TC) as per standard			Digital value [1]
IEC 60584, Part 1	Type K (NiCr-Ni) (36)	0 to +800 °C (32 to +1 472 °F)	0.31 °C (0.56 °F)
IEC 60584, Part 1	Type S (PtRh10-Pt) (39)		0.97 °C (1.75 °F)
GOST R8.585-2001	Type L (NiCr-CuNi) (43)		2.18 °C (3.92 °F)

1) Measured value transmitted via FIELDBUS®.

Measured error for resistance thermometers (RTD) and resistance transmitters

Standard	Designation	Measuring range	Measured error (±)		Non-repeatability (±)
			Digital [1]		
			Maximum [2]	Based on measured value [3]	
IEC 60751:2008	Pt100 (1)	−200 to +850 °C (−328 to +1 562 °F)	≤ 0.12 °C (0.21 °F)	0.06 °C (0.11 °F) + 0.006% * (MV - LRV)	≤ 0.05 °C (0.09 °F)

Standard	Designation	Measuring range	Measured error (±)		Non-repeatability (±)
	Pt200 (2)		≤ 0.30 °C (0.54 °F)	0.11 °C (0.2 °F) + 0.018% * (MV - LRV)	≤ 0.13 °C (0.23 °F)
	Pt500 (3)	−200 to +250 °C (−328 to +482 °F)	≤ 0.16 °C (0.29 °F)	0.05 °C (0.09 °F) + 0.015% * (MV - LRV)	≤ 0.08 °C (0.14 °F)
	Pt1000 (4)	−200 to +250 °C (−328 to +482 °F)	≤ 0.09 °C (0.16 °F)	0.03 °C (0.05 °F) + 0.013% * (MV - LRV)	≤ 0.05 °C (0.09 °F)
JIS C1604:1984	Pt100 (5)	−200 to +649 °C (−328 to +1 200 °F)		0.05 °C (0.09 °F) + 0.006% * (MV - LRV)	≤ 0.04 °C (0.07 °F)
GOST 6651-94	Pt50 (8)	−200 to +1 100 °C (−328 to +2 012 °F)	≤ 0.20 °C (0.36 °F)	0.10 °C (0.18 °F) + 0.008% * (MV - LRV)	≤ 0.11 °C (0.2 °F)
	Pt100 (9)	−200 to +850 °C (−328 to +1 562 °F)	≤ 0.11 °C (0.2 °F)	0.05 °C (0.09 °F) + 0.006% * (MV - LRV)	≤ 0.05 °C (0.09 °F)
DIN 43760 IPTS-68	Ni100 (6)	−60 to +250 °C (−76 to +482 °F)	≤ 0.05 °C (0.09 °F)	0.05 °C (0.09 °F) - 0.006% * (MV - LRV)	≤ 0.03 °C (0.05 °F)
	Ni1000	−60 to +150 °C (−76 to +302 °F)			
OIML R84: 2003 / GOST 6651-2009	Cu50 (10)	−200 to +200 °C (−328 to +1 562 °F)	≤ 0.11 °C (0.2 °F)	0.09 °C (0.16 °F) + 0.006% * (MV - LRV)	≤ 0.05 °C (0.09 °F)
	Cu100 (11)		≤ 0.06 °C (0.11 °F)	0.05 °C (0.09 °F) + 0.003% * (MV - LRV)	≤ 0.04 °C (0.07 °F)
Resistance transmitter	Resistance Ω	10 to 400 Ω	32 mΩ	-	15mΩ
		10 to 2 000 Ω	300 mΩ	-	≤ 200mΩ

1) Measured value transmitted via FIELDBUS®.
2) Maximum measured error for the specified measuring range.
3) Deviations from maximum measured error possible due to rounding.

Measured error for thermocouples (TC) and voltage transmitters

Standard	Designation	Measuring range	Measured error (±)		Non-repeatability (±)
			Digital [1]		
			Maximum [2]	Based on measured value [3]	
IEC 60584-1	Type A (30)	0 to +2 500 °C (+32 to +4 532 °F)	≤ 1.33 °C (2.39 °F)	0.8 °C (1.44 °F) + 0.021% * MV	≤ 0.52 °C (0.94 °F)
	Type B (31)	+500 to +1 820 °C (+932 to +3 308 °F)	≤ 1.5 °C (2.7 °F)	1.5 °C (2.7 °F) - 0.06% * (MV - LRV)	≤ 0.67 °C (1.21 °F)
IEC 60584-1 / ASTM E988-96	Type C (32)	0 to +2 000 °C (+32 to +3 632 °F)	≤ 0.66 °C (1.19 °F)	0.55 °C (1 °F) + 0.0055% * MV	≤ 0.33 °C (0.59 °F)
ASTM E988-96	Type D (33)		≤ 0.75 °C (1.35 °F)	0.75 °C (1.44 °F) - 0.008% * MV	≤ 0.41 °C (0.74 °F)
IEC 60584-1	Type E (34)	−150 to +1 000 °C (−238 to +2 192 °F)	≤ 0.22 °C (0.4 °F)	0.22 °C (0.40 °F) - 0.006% * (MV - LRV)	≤ 0.07 °C (0.13 °F)
	Type J (35)	−150 to +1 200 °C (−238 to +2 192 °F)	≤ 0.27 °C (0.49 °F)	0.27 °C (0.49 °F) - 0.005% * (MV - LRV)	≤ 0.08 °C (0.14 °F)
	Type K (36)		≤ 0.35 °C (0.63 °F)	0.35 °C (0.63 °F) - 0.005% * (MV - LRV)	≤ 0.11 °C (0.20 °F)
	Type N (37)	−150 to +1 300 °C (−238 to +2 372 °F)	≤ 0.48 °C (0.86 °F)	0.48 °C (0.86 °F) - 0.014% * (MV - LRV)	≤ 0.16 °C (0.29 °F)
	Type R (38)	+50 to +1 768 °C (+122 to +3 214 °F)	≤ 1.12 °C (2.00 °F)	1.12 °C (2.00 °F) - 0.03% * MV	≤ 0.76 °C (1.37 °F)

Standard	Designation	Measuring range	Measured error (±)		Non-repeatability (±)
	Type S (39)		≤ 1.15 °C (2.07 °F)	1.15 °C (2.07 °F) - 0.022% * MV	≤ 0.74 °C (1.33 °F)
	Type T (40)	−150 to +400 °C (−238 to +752 °F)	≤ 0.36 °C (0.47 °F)	0.36 °C (0.47 °F) - 0.04% * (MV - LRV)	≤ 0.11 °C (0.20 °F)
DIN 43710	Type L (41)	−150 to +900 °C (−238 to +1 652 °F)	≤ 0.29 °C (0.52 °F)	0.29 °C (0.52 °F) - 0.009% * (MV - LRV)	≤ 0.07 °C (0.13 °F)
	Type U (42)	−150 to +600 °C (−238 to +1 112 °F)	≤ 0.33 °C (0.6 °F)	0.33 °C (0.6 °F) - 0.028% * (MV - LRV)	≤ 0.10 °C (0.18 °F)
GOST R8.585-2001	Type L (43)	−200 to +800 °C (−328 to +1 472 °F)	≤ 2.20 °C (4.00 °F)	2.2 °C (4.00 °F) - 0.015% * (MV - LRV)	≤ 0.15 °C (0.27 °F)
Voltage transmitter (mV)		−20 to +100 mV	10 µV	-	4 µV

1) Measured value transmitted via the fieldbus.
2) Maximum measured error for the specified measuring range.
3) Deviations from maximum measured error possible due to rounding.

MV = Measured value

LRV = Lower range value of relevant sensor

Total measured error of transmitter at current output = √(Measured error digital² + Measured error D/A²)

Sample calculation with Pt100, measuring range 0 to +200 °C (+32 to +392 °F), ambient temperature +25 °C (+77 °F), supply voltage 24 V:

Measured error = 0.06 °C + 0.006% x (200 °C - (-200 °C)):	0.084 °C (0.151 °F)

Sample calculation with Pt100, measuring range 0 to +200 °C (+32 to +392 °F), ambient temperature +35 °C (+95 °F), supply voltage 30 V:

Measured error = 0.06 °C + 0.006% x (200 °C - (-200 °C)):	0.084 °C (0.151 °F)
Influence of ambient temperature = (35 - 25) x (0.002% x 200 °C - (-200 °C)), min. 0.005 °C	0.08 °C (0.144 °F)
Influence of supply voltage = (30 - 24) x (0.002% x 200 °C - (-200 °C)), min. 0.005 °C	0.048 °C (0.086 °F)
Measured error: √(Measured error² + Influence of ambient temperature² + Influence of supply voltage²)	**0.126 °C (0.227 °F)**

Sensor adjustment

Sensor-transmitter-matching

RTD sensors are one of the most linear temperature measuring elements. Nevertheless, the output must be linearized. To significantly improve temperature measurement accuracy, the device allows the use of two methods:

- Callendar-Van Dusen coefficients (Pt100 resistance thermometer)
  The Callendar-Van-Dusen equation is described as:
  $R_T = R_0[1+AT+BT^2+C(T-100)T^3]$

  The coefficients A, B and C are used to match the sensor (platinum) and transmitter in order to improve the accuracy of the measuring system. The coefficients for a standard sensor are specified in IEC 751. If no standard sensor is available or if greater accuracy is required, the coefficients for each sensor can be determined specifically with the aid of sensor calibration.

- Linearization for copper/nickel resistance thermometers (RTD)
  The polynomial equation for copper/nickel is as follows:
  $R_T = R_0(1+AT+BT^2)$

  The coefficients A and B are used for the linearization of nickel or copper resistance thermometers (RTD). The exact values of the coefficients derive from the calibration data and are specific to each sensor. The sensor-specific coefficients are then sent to the transmitter.

Sensor-transmitter-matching using one of the methods explained above significantly improves the temperature measurement accuracy of the entire system. This is because the transmitter uses the specific data pertaining to the connected sensor to calculate the measured temperature, instead of using the standardized sensor curve data.

Operating influences

The measured error data correspond to ±2 σ (Gaussian distribution).

Influence of ambient temperature and supply voltage on operation for resistance thermometers (RTD) and resistance transmitters

Designation	Standard	Ambient temperature: Influence (±) per 1 °C (1.8 °F) change		Supply voltage: Influence (±) per V change	
		Digital [1]		Digital [1]	
		Maximum	Based on measured value	Maximum	Based on measured value
Pt100 (1)	IEC 60751:2008	≤ 0.02 °C (0.036 °F)	0.002% * (MV -LRV), at least 0.005 °C (0.009 °F)	≤ 0.12 °C (0.021 °F)	0.002% * (MV -LRV), at least 0.005 °C (0.009 °F)
Pt200 (2)		≤ 0.026 °C (0.047 °F)	-	≤ 0.026 °C (0.047 °F)	-
Pt500 (3)		≤ 0.014 °C (0.025 °F)	0.002% * (MV -LRV), at least 0.009 °C (0.016 °F)	≤ 0.014 °C (0.025 °F)	0.002% * (MV -LRV), at least 0.009 °C (0.016 °F)
Pt1000 (4)		≤ 0.01 °C (0.018 °F)	0.002% * (MV -LRV), at least 0.004 °C (0.007 °F)	≤ 0.01 °C (0.018 °F)	0.002% * (MV -LRV), at least 0.004 °C (0.007 °F)
Pt100 (5)	JIS C1604:1984		0.002% * (MV -LRV), at least 0.005 °C (0.009 °F)		0.002% * (MV -LRV), at least 0.005 °C (0.009 °F)
Pt50 (8)	GOST 6651-94	≤ 0.03 °C (0.054 °F)	0.002% * (MV -LRV), at least 0.01 °C (0.018 °F)	≤ 0.03 °C (0.054 °F)	0.002% * (MV -LRV), at least 0.01 °C (0.018 °F)
Pt100 (9)		≤ 0.02 °C (0.036 °F)	0.002% * (MV -LRV), at least 0.005 °C (0.009 °F)	≤ 0.02 °C (0.036 °F)	0.002% * (MV -LRV), at least 0.005 °C (0.009 °F)
Ni100 (6)	DIN 43760 IPTS-68	≤ 0.005 °C (0.009 °F)	-	≤ 0.005 °C (0.009 °F)	-
Ni1000			-		-
Cu50 (10)	OIML R84: 2003 / GOST 6651-2009	≤ 0.008 °C (0.014 °F)	-	≤ 0.008 °C (0.014 °F)	-
Cu100 (11)			0.002% * (MV -LRV), at least 0.004 °C (0.007 °F)		0.002% * (MV -LRV), at least 0.004 °C (0.007 °F)
Resistance transmitter (Ω)					
10 to 400 Ω		≤ 6 mΩ	0.0015% * (MV -LRV), at least 1.5 mΩ	≤ 6 mΩ	0.0015% * (MV -LRV), at least 1.5 mΩ
10 to 2 000 Ω		≤ 30 mΩ	0.0015% * (MV -LRV), at least 15 mΩ	≤ 30 mΩ	0.0015% * (MV -LRV), at least 15 mΩ

1) Measured value transmitted via the fieldbus.

Influence of ambient temperature and supply voltage on operation for thermocouples (TC) and voltage transmitters

Designation	Standard	Ambient temperature: Influence (±) per 1 °C (1.8 °F) change		Supply voltage: Influence (±) per V change	
		Digital [1]		Digital	
		Maximum	Based on measured value	Maximum	Based on measured value
Type A (30)	IEC 60584-1	≤ 0.14 °C (0.25 °F)	0.0055% * MV, at least 0.03 °C (0.005 °F)	≤ 0.14 °C (0.25 °F)	0.0055% * MV, at least 0.03 °C (0.005 °F)
Type B (31)		≤ 0.06 °C (0.11 °F)	-	≤ 0.06 °C (0.11 °F)	-
Type C (32)	IEC 60584-1 / ASTM E988-96	≤ 0.09 °C (0.16 °F)	0.0045% * MV, at least 0.03 °C (0.005 °F)	≤ 0.09 °C (0.16 °F)	0.0045% * MV, at least 0.03 °C (0.005 °F)
Type D (33)	ASTM E988-96	≤ 0.08 °C (0.14 °F)	0.004% * MV, at least 0.035 °C (0.063 °F)	≤ 0.08 °C (0.14 °F)	0.004% * MV, at least 0.035 °C (0.063 °F)
Type E (34)	IEC 60584-1	≤ 0.03 °C (0.05 °F)	0.003% * (MV - LRV), at least 0.016 °C (0.029 °F)	≤ 0.03 °C (0.05 °F)	0.003% * (MV - LRV), at least 0.016 °C (0.029 °F)
Type J (35)		≤ 0.02 °C (0.04 °F)	0.0028% * (MV - LRV), at least 0.02 °C (0.036 °F)	≤ 0.02 °C (0.04 °F)	0.0028% * (MV - LRV), at least 0.02 °C (0.036 °F)
Type K (36)		≤ 0.04 °C (0.07 °F)	0.003% * (MV - LRV), at least 0.013 °C (0.023 °F)	≤ 0.04 °C (0.07 °F)	0.003% * (MV - LRV), at least 0.013 °C (0.023 °F)
Type N (37)			0.0028% * (MV - LRV), at least 0.020 °C (0.036 °F)		0.0028% * (MV - LRV), at least 0.020 °C (0.036 °F)
Type R (38)		≤ 0.06 °C (0.11 °F)	0.0035% * MV, at least 0.047 °C (0.085 °F)	≤ 0.06 °C (0.11 °F)	0.0035% * MV, at least 0.047 °C (0.085 °F)
Type S (39)		≤ 0.05 °C (0.09 °F)	-	≤ 0.05 °C (0.09 °F)	-
Type T (40)		≤ 0.01 °C (0.02 °F)	-	≤ 0.01 °C (0.02 °F)	-
Type L (41)	DIN 43710	≤ 0.02 °C (0.04 °F)	-	≤ 0.02 °C (0.04 °F)	-
Type U (42)		≤ 0.01 °C (0.02 °F)	-	≤ 0.01 °C (0.02 °F)	-
Type L (43)	GOST R8.585-2001	≤ 0.02 °C (0.04 °F)	-	≤ 0.02 °C (0.04 °F)	-
Voltage transmitter (mV)					
–20 to 100 mV	-	≤ 3 µV	-	≤ 3 µV	-

1) Measured value transmitted via the fieldbus.

MV = Measured value

LRV = Lower range value of relevant sensor

Total measured error of transmitter at current output = $\sqrt{(\text{Measured error digital}^2 + \text{Measured error D/A}^2)}$

Long-term drift, resistance thermometers (RTD) and resistance transmitters

Designation	Standard	Long-term drift (±)		
		after 1 year	after 3 years	after 5 years
		Maximum		
Pt100 (1)	IEC 60751:2008	≤ 0.03 °C (0.05 °F) + 0.024% * measuring span	≤ 0.042 °C (0.076 °F) + 0.035% * measuring span	≤ 0.051 °C (0.092 °F) + 0.037% * measuring span
Pt200 (2)		≤ 0.17 °C (0.31 °F) + 0.016% * measuring span	≤ 0.28 °C (0.5 °F) + 0.022% * measuring span	≤ 0.343 °C (0.617 °F) + 0.025% * measuring span

Designation	Standard	Long-term drift (±)		
Pt500 (3)		≤ 0.067 °C (0.121 °F) + 0.018% * measuring span	≤ 0.111 °C (0.2 °F) + 0.025% * measuring span	≤ 0.137 °C (0.246 °F) + 0.028% * measuring span
Pt1000 (4)		≤ 0.034 °C (0.06 °F) + 0.02% * measuring span	≤ 0.056 °C (0.1 °F) + 0.029% * measuring span	≤ 0.069 °C (0.124 °F) + 0.032% * measuring span
Pt100 (5)	JIS C1604:1984	≤ 0.03 °C (0.054 °F) + 0.022% * measuring span	≤ 0.042 °C (0.076 °F) + 0.032% * measuring span	≤ 0.051 °C (0.092 °F) + 0.034% * measuring span
Pt50 (8)	GOST 6651-94	≤ 0.055 °C (0.01 °F) + 0.023% * measuring span	≤ 0.089 °C (0.16 °F) + 0.032% * measuring span	≤ 0.1 °C (0.18 °F) + 0.035% * measuring span
Pt100 (9)	GOST 6651-94	≤ 0.03 °C (0.054 °F) + 0.024% * measuring span	≤ 0.042 °C (0.076 °F) + 0.034% * measuring span	≤ 0.051 °C (0.092 °F) + 0.037% * measuring span
Ni100 (6)	DIN 43760 IPTS-68	≤ 0.025 °C (0.045 °F) + 0.016% * measuring span	≤ 0.042 °C (0.076 °F) + 0.02% * measuring span	≤ 0.047 °C (0.085 °F) + 0.021% * measuring span
Ni1000	DIN 43760 IPTS-68	≤ 0.02 °C (0.036 °F) + 0.018% * measuring span	≤ 0.032 °C (0.058 °F) + 0.024% * measuring span	≤ 0.036 °C (0.065 °F) + 0.025% * measuring span
Cu50 (10)	OIML R84:2003 / GOST 6651-2009	≤ 0.053 °C (0.095 °F) + 0.013% * measuring span	≤ 0.084 °C (0.151 °F) + 0.016% * measuring span	≤ 0.094 °C (0.169 °F) + 0.016% * measuring span
Cu100 (11)		≤ 0.027 °C (0.049 °F) + 0.019% * measuring span	≤ 0.042 °C (0.076 °F) + 0.026% * measuring span	≤ 0.047 °C (0.085 °F) + 0.027% * measuring span
Resistance transmitter				
10 to 400 Ω	-	≤ 10 mΩ + 0.022% * measuring span	≤ 14 mΩ + 0.031% * measuring span	≤ 16 mΩ + 0.033% * measuring span
10 to 2 000 Ω	-	≤ 144 mΩ + 0.019% * measuring span	≤ 238 mΩ + 0.026% * measuring span	≤ 294 mΩ + 0.028% * measuring span

Long-term drift, thermocouples (TC) and voltage transmitters

Designation	Standard	Long-term drift (±)		
		after 1 year	after 3 years	after 5 years
		Maximum		
Type A (30)	IEC 60584-1	≤ 0.17 °C (0.306 °F) + 0.021% * measuring span	≤ 0.27 °C (0.486 °F) + 0.03% * measuring span	≤ 0.38 °C (0.683 °F) + 0.035% * measuring span
Type B (31)		≤ 0.5 °C (0.9 °F)	≤ 0.75 °C (1.35 °F)	≤ 1.0 °C (1.8 °F)
Type C (32)	IEC 60584-1 / ASTM E988-96	≤ 0.15 °C (0.27 °F) + 0.018% * measuring span	≤ 0.24 °C (0.43 °F) + 0.026% * measuring span	≤ 0.34 °C (0.61 °F) + 0.027% * measuring span
Type D (33)	ASTM E988-96	≤ 0.21 °C (0.38 °F) + 0.015% * measuring span	≤ 0.34 °C (0.61 °F) + 0.02% * measuring span	≤ 0.47 °C (0.85 °F) + 0.02% * measuring span
Type E (34)	IEC 60584-1	≤ 0.06 °C (0.11 °F) + 0.018% * measuring span	≤ 0.09 °C (0.162 °F) + 0.025% * measuring span	≤ 0.13 °C (0.234 °F) + 0.026% * measuring span
Type J (35)	IEC 60584-1	≤ 0.06 °C (0.11 °F) + 0.019% * measuring span	≤ 0.1 °C (0.18 °F) + 0.025% * measuring span	≤ 0.14 °C (0.252 °F) + 0.027% * measuring span
Type K (36)		≤ 0.09 °C (0.162 °F) + 0.017% * (MV + 150 °C (270 °F))	≤ 0.14 °C (0.252 °F) + 0.023% * measuring span	≤ 0.19 °C (0.342 °F) + 0.024% * measuring span
Type N (37)	IEC 60584-1	≤ 0.13 °C (0.234 °F) + 0.015% * (MV + 150 °C (270 °F))	≤ 0.2 °C (0.36 °F) + 0.02% * measuring span	≤ 0.28 °C (0.5 °F) + 0.02% * measuring span
Type R (38)		≤ 0.31 °C (0.558 °F) + 0.011% * (MV - 50 °C (90 °F))	≤ 0.5 °C (0.9 °F) + 0.013% * measuring span	≤ 0.69 °C (1.241 °F) + 0.011% * measuring span
Type S (39)	IEC 60584-1	≤ 0.31 °C (0.558 °F) + 0.011% * measuring span	≤ 0.5 °C (0.9 °F) + 0.013% * measuring span	≤ 0.7 °C (1.259 °F) + 0.011% * measuring span
Type T (40)		≤ 0.09 °C (0.162 °F) + 0.011% * measuring span	≤ 0.15 °C (0.27 °F) + 0.013% * measuring span	≤ 0.2 °C (0.36 °F) + 0.012% * measuring span

Designation	Standard	Long-term drift (±)		
Type L (41)		≤ 0.06 °C (0.108 °F) + 0.017% * measuring span	≤ 0.1 °C (0.18 °F) + 0.022% * measuring span	≤ 0.14 °C (0.252 °F) + 0.022% * measuring span
Type U (42)		≤ 0.09 °C (0.162 °F) + 0.013% * measuring span	≤ 0.14 °C (0.252 °F) + 0.017% * measuring span	≤ 0.2 °C (0.360 °F) + 0.015% * measuring span
Type L (43)	GOST R8.585-2001	≤ 0.08 °C (0.144 °F) + 0.015% * measuring span	≤ 0.12 °C (0.216 °F) + 0.02% * measuring span	≤ 0.17 °C (0.306 °F) + 0.02% * measuring span
Voltage transmitter (mV)				
–20 to 100 mV	-	≤ 2 µV + 0.022% * measuring span	≤ 3.5 µV + 0.03% * measuring span	≤ 4.7 µV + 0.033% * measuring span

Influence of reference junction

Pt100 DIN IEC 60751 Cl. B (internal reference junction with thermocouples TC)

Mounting

Installation instructions

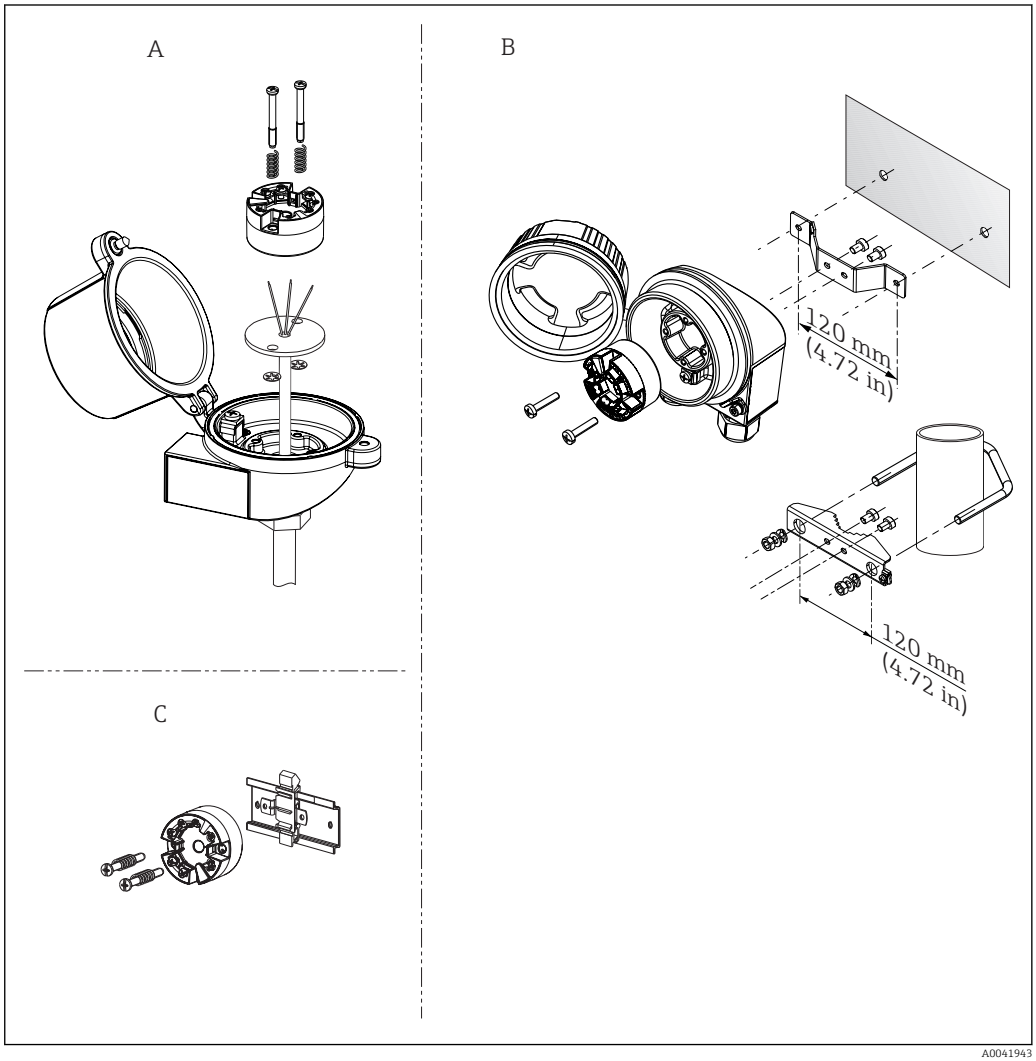

4 *Installation options for transmitter*

A Terminal head, form B (flat face) as per DIN EN 50446, direct installation on insert with cable entry (middle hole 7 mm (0.28 in))
B Separated from process in field housing, wall or pipe mounting
C With clip on DIN rail as per IEC 60715 (TH35)

Orientation: No restrictions

When installing the head transmitter in a terminal head form B (flat face), make sure there is sufficient space in the terminal head!

Environment

Ambient temperature range	−40 to +85 °C (−40 to +185 °F), for hazardous areas see Ex documentation
Storage temperature	−40 to +100 °C (−40 to +212 °F)
Altitude	Up to 4000 m (4374.5 yards) above sea level
Humidity	▪ Condensation permitted as per IEC 60 068-2-33 ▪ Max. rel. humidity: 95% as per IEC 60068-2-30
Climate class	C as per EN 60654-1
Degree of protection	▪ Head transmitter with screw terminals: IP 00, with spring terminals: IP 30. In installed state, depends on the terminal head or field housing used. ▪ When installing in field housing TA30A, TA30D or TA30H: IP 66/67 (NEMA Type 4x encl.)
Shock and vibration resistance	Vibration resistance as per IEC 60068-2-6 10 to 2 000 Hz at 5g (increased vibration stress)
Electromagnetic compatibility (EMC)	**CE compliance** Electromagnetic compatibility in accordance with all the relevant requirements of the IEC/EN 61326 series and NAMUR Recommendation EMC (NE21). For details, refer to the Declaration of Conformity. Maximum measured error <1% of measuring range. Interference immunity as per IEC/EN 61326 series, industrial requirements Interference emission as per IEC/EN 61326 series, Class B equipment
Overvoltage category	Measurement category II
Pollution level	Pollution level 2

Mechanical construction

Design, dimensions

Dimensions in mm (in)

Head transmitter

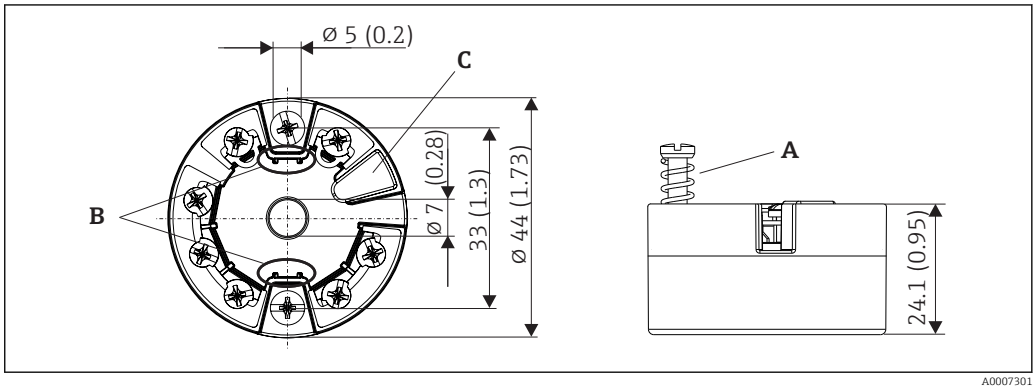

5 Version with screw terminals

A Spring travel L ≥ 5 mm (not for US - M4 securing screws)
B Mounting elements for attachable measured value display TID10
C Service interface for connecting measured value display or configuration tool

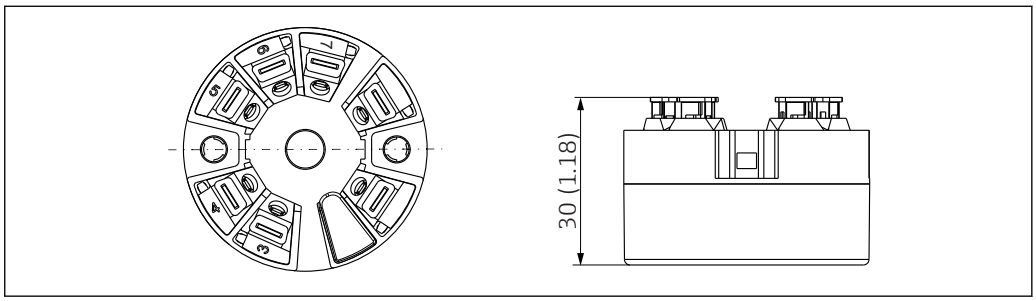

6 Version with push-in terminals. Dimensions are identical to the version with screw terminals, apart from housing height.

Field housing

All field housings have an internal geometry in accordance with DIN EN 50446, form B (flat face).
Cable glands in the diagrams: M20x1.5

Maximum ambient temperatures for cable glands	
Type	**Temperature range**
Polyamide cable gland ½" NPT, M20x1.5 (non-Ex)	−40 to +100 °C (−40 to 212 °F)
Polyamide cable gland M20x1.5 (for dust ignition-proof area)	−20 to +95 °C (−4 to 203 °F)
Brass cable gland ½" NPT, M20x1.5 (for dust ignition-proof area)	−20 to +130 °C (−4 to +266 °F)
Fieldbus connector (M12x1 PA, 7/8" FF)	−40 to +105 °C (−40 to +221 °F)

TA30A	Specification
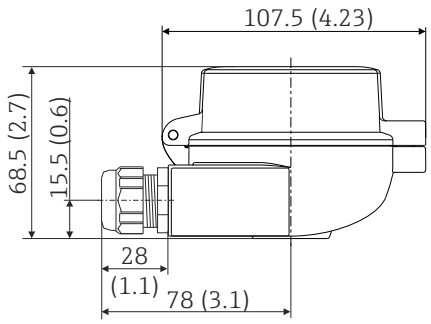	▪ Two cable entries ▪ Material: aluminum, polyester powder coated Seals: silicone ▪ Cable entry glands: 1/2" NPT and M20x1.5 ▪ Color of head: blue, RAL 5012 ▪ Color of cap: gray, RAL 7035 ▪ Weight: 330 g (11.64 oz)

TA30A with display window in cover	Specification
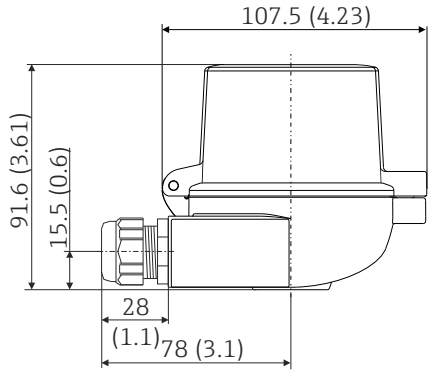	▪ Two cable entries ▪ Material: aluminum, polyester powder coated Seals: silicone ▪ Cable entry glands: 1/2" NPT and M20x1.5 ▪ Color of head: blue, RAL 5012 ▪ Color of cap: gray, RAL 7035 ▪ Weight: 420 g (14.81 oz)

TA30H	Specification
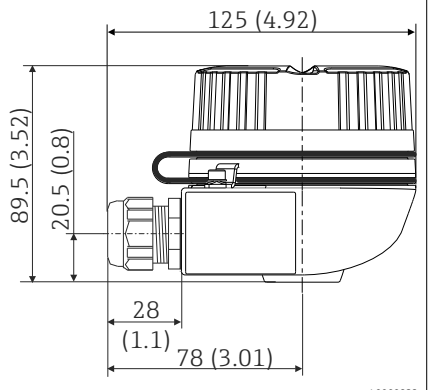	▪ Flameproof (XP) version, explosion-protected, captive screw cap, with two cable entries ▪ Protection class: NEMA Type 4x Encl. ▪ Material: ▪ Aluminum with polyester powder coating ▪ Stainless steel 316L without coating ▪ Cable entry glands: ½" NPT, M20x1.5 ▪ Color of aluminum head: blue, RAL 5012 ▪ Color of aluminum cap: gray, RAL 7035 ▪ Weight: ▪ Aluminum approx. 640 g (22.6 oz) ▪ Stainless steel approx. 2 400 g (84.7 oz)

TA30H with display window in cover	Specification
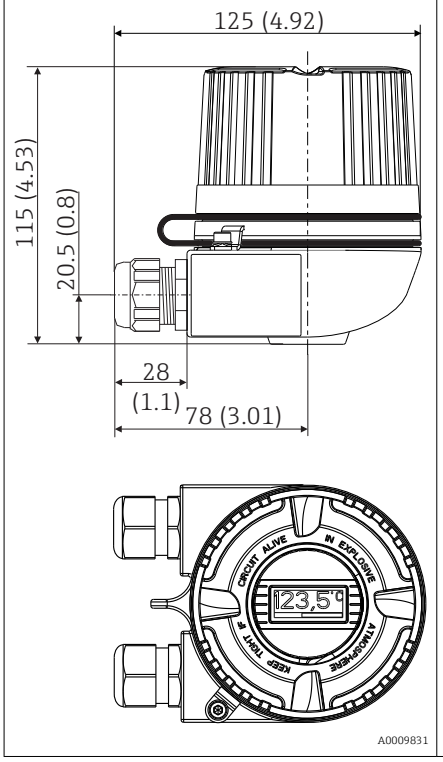	▪ Flameproof (XP) version, explosion-protected, captive screw cap, with two cable entries ▪ Protection class: NEMA Type 4x Encl. ▪ Material: ▪ Aluminum with polyester powder coating ▪ Stainless steel 316L without coating ▪ Cable entry glands: ½" NPT, M20x1.5 ▪ Color of aluminum head: blue, RAL 5012 ▪ Color of aluminum cap: gray, RAL 7035 ▪ Weight: ▪ Aluminum approx. 860 g (30.33 oz) ▪ Stainless steel approx. 2 900 g (102.3 oz)

TA30D	Specification
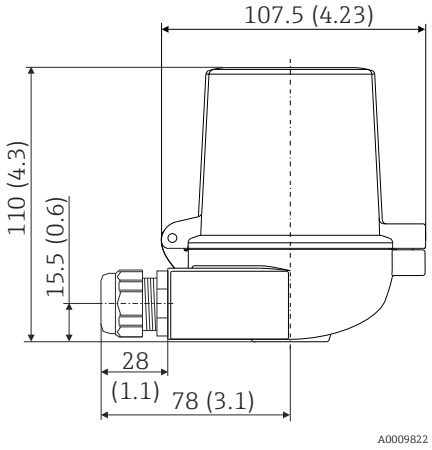	▪ 2 cable entries ▪ Material: aluminum, polyester powder coated Seals: silicone ▪ Cable entry glands: 1/2" NPT and M20x1.5 ▪ Two head transmitters can be mounted. In the standard configuration one transmitter is mounted in the terminal head cover and an additional terminal block is installed directly on the insert. ▪ Color of head: blue, RAL 5012 ▪ Color of cap: gray, RAL 7035 ▪ Weight: 390 g (13.75 oz)

Weight

- Head transmitter: approx. 40 to 50 g (1.4 to 1.8 oz)
- Field housing: see specifications

Materials

All the materials used are RoHS-compliant.

- Housing: Polycarbonate (PC), complies with UL94 HB (fire resistance properties)
- Terminals:
  - Screw terminals: nickel-plated brass and gold-plated or tin-plated contacts
  - Push-in terminals: tin-plated brass, contact springs 1.4310, 301 (AISI)
- Potting: PU, corresponds to UL94 V0 WEVO PU 403 FP / FL (fire resistance properties)

Field housing: see specifications

Operability

Local operation

Head transmitter

The head transmitter has no display or operating elements. There is the option of using the attachable measured value display TID10 together with the head transmitter. The display provides plain-text information on the current measured value and the tag name. An optional bar graph is also used. In the event of a fault in the measurement chain, this will be displayed in inverse color showing the channel ident and error number. DIP switches can be found on the rear of the display. These enable hardware settings to be made e.g. write protection.

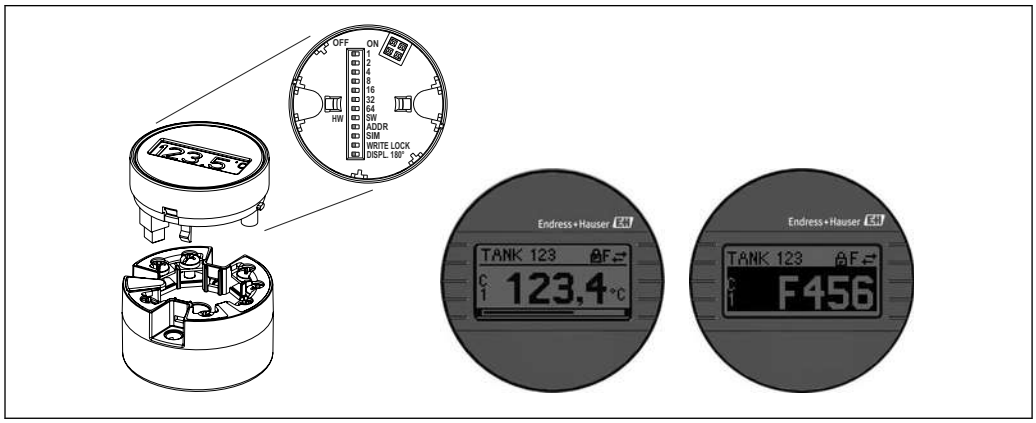

7 *Attachable measured value display TID10 with bar graph indicator (optional)*

If the head transmitter is installed in a field housing and used with a display, an enclosure with a glass window in the cover must be used.

Remote operation

PROFIBUS® PA functions and device-specific parameters are configured via fieldbus communication. Special configuration tools from different manufacturers are available for this purpose. For more information, contact your Endress+Hauser sales representative.

Configuration software
Endress+Hauser FieldCare (DTM)
SIMATIC PDM (EDD)

Where to obtain device master files (GSD) and device drivers:

- GSD file: www.endress.com (→ Download → Software)
- Profile GSD file: www.profibus.com
- FieldCare/DTM, SIMATIC PDM (EDD): www.endress.com (→ Download → Software)

Bus address

The device or bus address is set either with the configuration software or with the DIP switches on the optional display.

Certificates and approvals

Current certificates and approvals for the product are available via the Product Configurator at www.endress.com.

1. Select the product using the filters and search field.
2. Open the product page.

The **Configuration** button opens the Product Configurator.

PROFIBUS® PA certification

The temperature transmitter is certified and registered by the PNO (PROFIBUS® Nutzerorganisation / PROFIBUS User Organization). The device meets the requirements of the following specifications:

- Certified in accordance with PROFIBUS® PA Profile 3.02
- The device can also be operated with certified devices of other manufacturers (interoperability)

Ordering information

Detailed ordering information is available for your nearest sales organization www.addresses.endress.com or in the Product Configurator under www.endress.com :

1. Click Corporate
2. Select the country
3. Click Products
4. Select the product using the filters and search field
5. Open the product page

The Configuration button to the right of the product image opens the Product Configurator.

Product Configurator - the tool for individual product configuration
- Up-to-the-minute configuration data
- Depending on the device: Direct input of measuring point-specific information such as measuring range or operating language
- Automatic verification of exclusion criteria
- Automatic creation of the order code and its breakdown in PDF or Excel output format
- Ability to order directly in the Endress+Hauser Online Shop

Accessories

Various accessories, which can be ordered with the device or subsequently from Endress+Hauser, are available for the device. Detailed information on the order code in question is available from your local Endress+Hauser sales center or on the product page of the Endress+Hauser website: www.endress.com.

Accessories included in the scope of delivery:
- Multilingual Brief Operating Instructions as hard copy
- ATEX supplementary documentation: ATEX Safety Instructions (XA), **C**ontrol **D**rawings (CD)
- Mounting material for head transmitter
- Optional mounting material for field housing (wall or pipe mounting)

Device-specific accessories

Accessories		
TID10 display unit for Endress+Hauser head transmitter iTEMP TMT8x [1], attachable		
Field housing TA30x for Endress+Hauser head transmitter		
Adapter for DIN rail mounting, DIN rail clip as per IEC 60715 (TH35) without securing screws		
Standard - DIN mounting set (2 screws + springs, 4 lock washers and 1 display connector cover)		
US - M4 securing screws (2 M4 screws and 1 display connector cover)		
Fieldbus connector (PROFIBUS® PA):	Threaded connection ▪ M20x1.5 ▪ NPT ½" ▪ M20x1.5	Cable connection thread ▪ M12 ▪ M12 ▪ 7/8"
Stainless steel wall mounting bracket Stainless steel pipe mounting bracket		

1) Without TMT80

Communication-specific accessories

Accessories	Description
Commubox FXA195 HART	For intrinsically safe HART® communication with FieldCare via the USB interface. For details, see Technical Information TI404F/00
Commubox FXA291	Connects Endress+Hauser field devices with a CDI interface (= Endress+Hauser Common Data Interface) and the USB port of a computer or laptop. For details, see Technical Information TI405C/07
WirelessHART adapter	Is used for the wireless connection of field devices. The WirelessHART® adapter can be easily integrated into field devices and existing infrastructures, offers data protection and transmission safety and can be operated in parallel with other wireless networks. For details, see Operating Instructions BA061S/04
Field Xpert SMT70	Universal, high-performance tablet PC for device configuration The tablet PC enables mobile plant asset management in hazardous and non-hazardous areas. It is suitable for commissioning and maintenance staff to manage field instruments with a digital communication interface and to record progress. This tablet PC is designed as a comprehensive, all-in-one solution. With a pre-installed driver library, it is an easy-to-use, touch-sensitive tool which can be used to manage field instruments throughout their entire life cycle. For details, see Technical Information TI01342S/04

Service-specific accessories

Accessories	Description
Applicator	Software for selecting and sizing Endress+Hauser measuring devices: ▪ Calculation of all the necessary data for identifying the optimum measuring device: e.g. pressure loss, accuracy or process connections. ▪ Graphic illustration of the calculation results Administration, documentation and access to all project-related data and parameters over the entire life cycle of a project. Applicator is available: Via the Internet: https://portal.endress.com/webapp/applicator

Accessories	Description
Configurator	Product Configurator - the tool for individual product configuration ▪ Up-to-the-minute configuration data ▪ Depending on the device: Direct input of measuring point-specific information such as measuring range or operating language ▪ Automatic verification of exclusion criteria ▪ Automatic creation of the order code and its breakdown in PDF or Excel output format ▪ Ability to order directly in the Endress+Hauser Online Shop The Configurator is available on the Endress+Hauser website at: www.endress.com -> Click "Corporate" -> Select your country -> Click "Products" -> Select the product using the filters and search field -> Open product page -> The "Configure" button to the right of the product image opens the Product Configurator.

DeviceCare SFE100	Configuration tool for devices via fieldbus protocols and Endress+Hauser service protocols. DeviceCare is the tool developed by Endress+Hauser for the configuration of Endress+Hauser devices. All smart devices in a plant can be configured via a point-to-point or point-to-bus connection. The user-friendly menus enable transparent and intuitive access to the field devices. For details, see Operating Instructions BA00027S

FieldCare SFE500	FDT-based plant asset management tool from Endress+Hauser. It can configure all smart field units in your system and helps you manage them. By using the status information, it is also a simple but effective way of checking their status and condition. For details, see Operating Instructions BA00027S and BA00065S

Accessories	Description
W@M	Life cycle management for your plant W@M offers assistance with a wide range of software applications over the entire process: from planning and procurement to the installation, commissioning and operation of the measuring devices. All the relevant information is available for every measuring device over the entire life cycle, such as the device status, device-specific documentation, spare parts etc. The application already contains the data of your Endress+Hauser device. Endress+Hauser also takes care of maintaining and updating the data records. W@M is available: Via the Internet: www.endress.com/lifecyclemanagement

Supplementary documentation

- Operating Instructions 'iTEMP TMT84' (BA00257R) and hard copy of associated Brief Operating Instructions 'iTEMP TMT84' (KA00258R)
- Supplementary ATEX documentation:
  ATEX II 1G Ex ia IIC: XA00069R
  ATEX II 2(1)G Ex ia IIC: XA01012T
  ATEX II 2G Ex d IIC and ATEX II 2D Ex tb IIIC: XA01007T
- Operating Instructions for "Display TID10" (BA00262R)
- Guidelines for planning and commissioning "PROFIBUS® DP/PA" (BA00034S)



www.addresses.endress.com

Endress+Hauser

People for Process Automation