E30057

Damping screw for pressure sensors

DAMPING SCREW

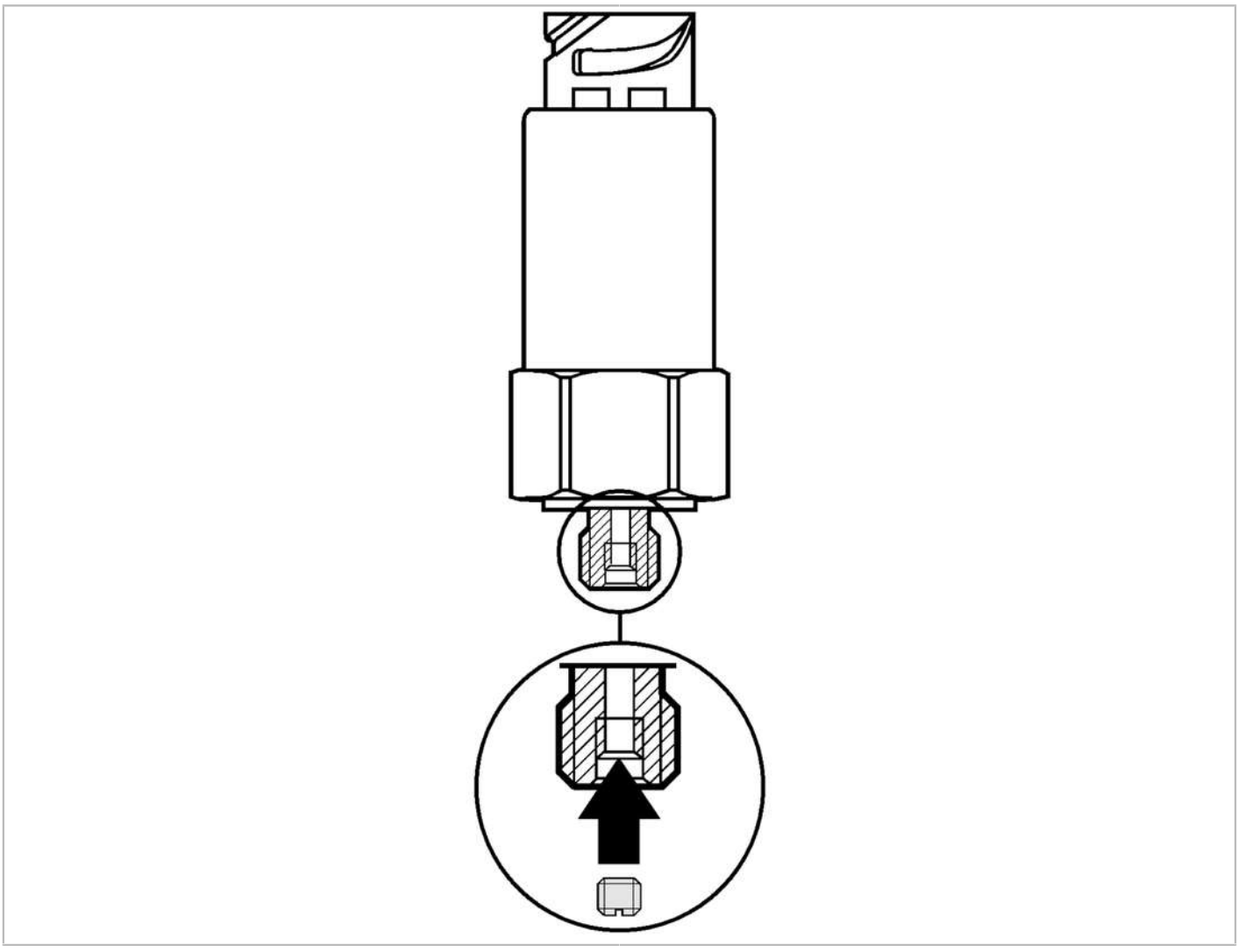

Application		
Design		for pressure sensors with M5 internal thread
Mechanical data		
Weight	[g]	3.4
Materials		stainless steel (1.4305 / 303)
Remarks		
Pack quantity		1 pcs.