IN8503

Inductive sensor

IN-3002-BPKG/0,15M/US

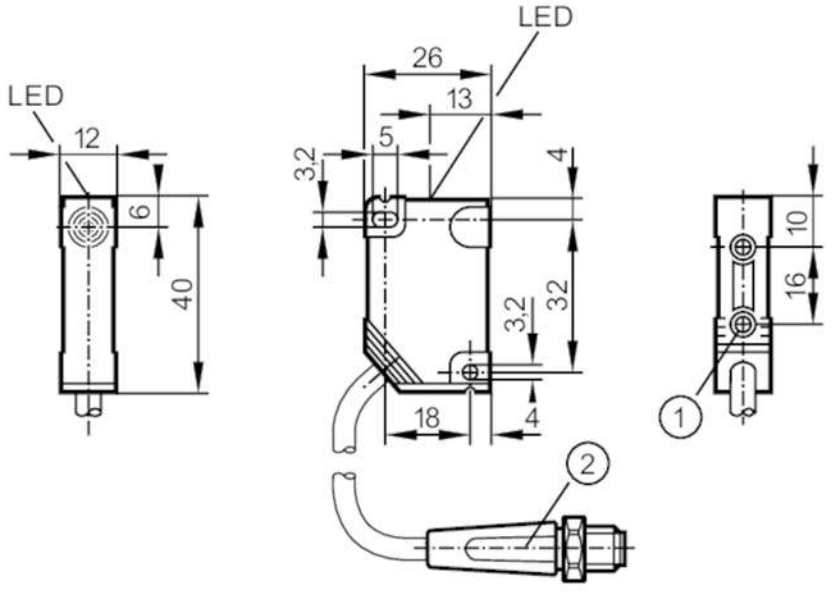

1 threaded bush M3 Depth 5.8 mm
Tightening torque maximum 1.2 Nm screw fixing class 8.8
when brass insert in contact with counterpart
2 illustration (example)

Product characteristics		
Electrical design		PNP
Output function		normally open
Sensing range	[mm]	2
Housing		rectangular
Dimensions	[mm]	40 x 12 x 26
Electrical data		
Operating voltage	[V]	10...36 DC
Current consumption	[mA]	15; (24 V)
Protection class		II
Reverse polarity protection		yes
Outputs		
Electrical design		PNP
Output function		normally open
Max. voltage drop switching output DC	[V]	2.5
Permanent current rating of switching output DC	[mA]	250
Switching frequency DC	[Hz]	1400
Short-circuit protection		yes
Type of short-circuit protection		pulsed
Overload protection		yes

IN8503

Inductive sensor

IN-3002-BPKG/0,15M/US

Detection zone			
Sensing range	[mm]	2	
Real sensing range Sr	[mm]	2 ± 10 %	
Operating distance	[mm]	0...1.6	
Accuracy / deviations			
Correction factor		steel: 1 / stainless steel: 0.7 / brass: 0.4 / aluminium: 0.3 / copper: 0.2	
Hysteresis	[% of Sr]	1...15	
Switch point drift	[% of Sr]	-10...10	
Operating conditions			
Ambient temperature	[°C]	-25...80	
Protection		IP 67	
Tests / approvals			
EMC		EN 60947-5-2	
Mechanical data			
Weight	[g]	43.5	
Housing		rectangular	
Mounting		flush mountable	
Dimensions	[mm]	40 x 12 x 26	
Materials		PBT	
Displays / operating elements			
Display		switching status	1 x LED, yellow
Remarks			
Pack quantity		1 pcs.	
Electrical connection - plug			

Cable: 0.15 m, PVC; 3 x 0.5 mm²

Connector: 1 x M12; coding: A



IN8503

Inductive sensor

IN-3002-BPKG/0,15M/US

Connection

