E38828

Welding adapter for process sensors

ADAPT, D3/ZERO VOID/R=19/T=1.50

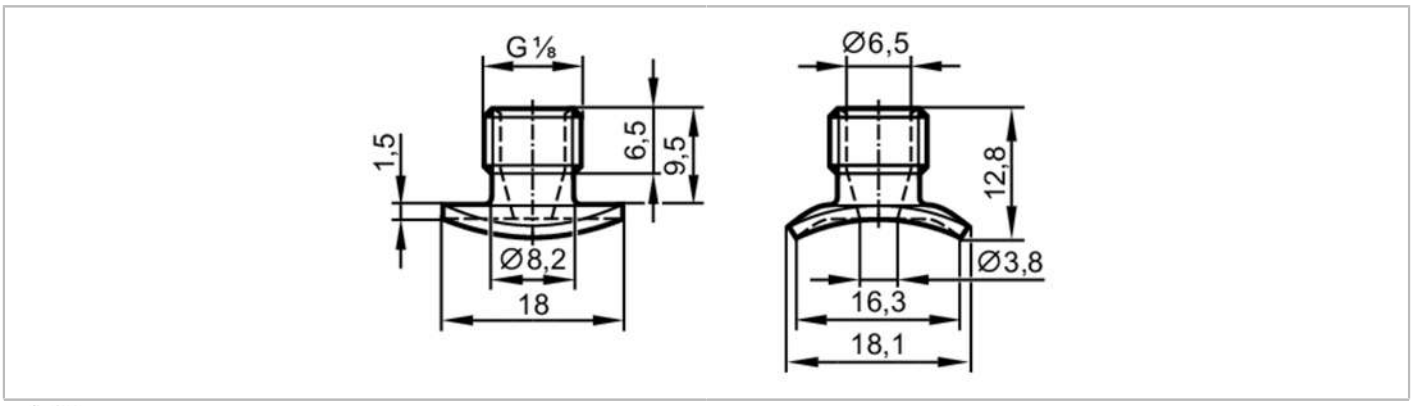

EC 1935/2004

Application		
Pressure rating	[bar]	120
Note on pressure rating		for the connection sensor - adapter
Tests / approvals		
Pressure Equipment Directive		A possible classification to PED depends on the application and has to be carried out by the user / operator.
Pressure Equipment Directive EAC		The adapter is intended for use in devices, machines and installations that do not fall under the categories of the technical rule TR CU 032/2013.
Safety instructions		The compatibility between medium and product material has to be checked in all applications.
Mechanical data		
Weight	[g]	8.5
Materials		stainless steel (1.4404 / 316L)
Sensor connection		G 1/8 internal thread Ø 3 mm
Process connection		welding adapter Ø 18 mm ; nominal pipe size: DN25...DN100; pipe wall thickness: 1,5 mm
Surface characteristics Ra/Rz of the wetted parts		< 0.4 / -
Remarks		
Pack quantity		1 pcs.