E40252

Mounting adapter for flow sensors

ADAPT G1-CLAMP/D64,0/DIN32676

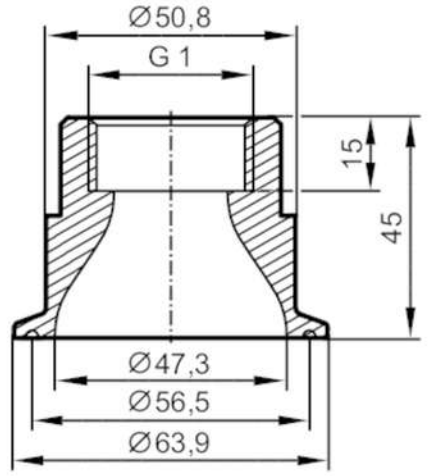

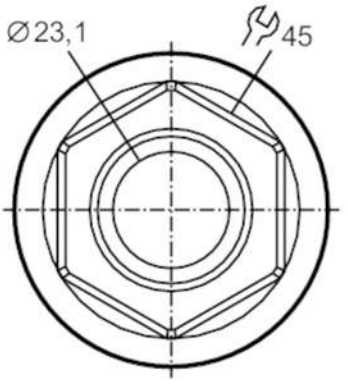

Application		
Design		for flow sensors Typ SM8
Application		for industrial applications; hygienic systems
Media		Liquids
Pressure rating	[bar]	16
Tests / approvals		
Pressure Equipment Directive		A possible classification to PED depends on the application and has to be carried out by the user / operator.
Pressure Equipment Directive EAC		The adapter is intended for use in devices, machines and installations that do not fall under the categories of the technical rule TR CU 032/2013.
Safety instructions		The compatibility between medium and product material has to be checked in all applications.
Mechanical data		
Weight	[g]	834.5
Materials		Adapter: stainless steel (1.4404 / 316L); Gasket: Centellen 23,5 x 30 x 3 mm
Sensor connection		G 1
Process connection		Clamp DN50 (2") DIN 32676 (ISO 2852)
Accessories		
Items supplied		O-rings: 2

E40252

Mounting adapter for flow sensors

ADAPT G1-CLAMP/D64,0/DIN32676

Remarks	
Pack quantity	2 pcs.