E21272

Mounting set for photoelectric sensors

O6 CLAMP BRACKET

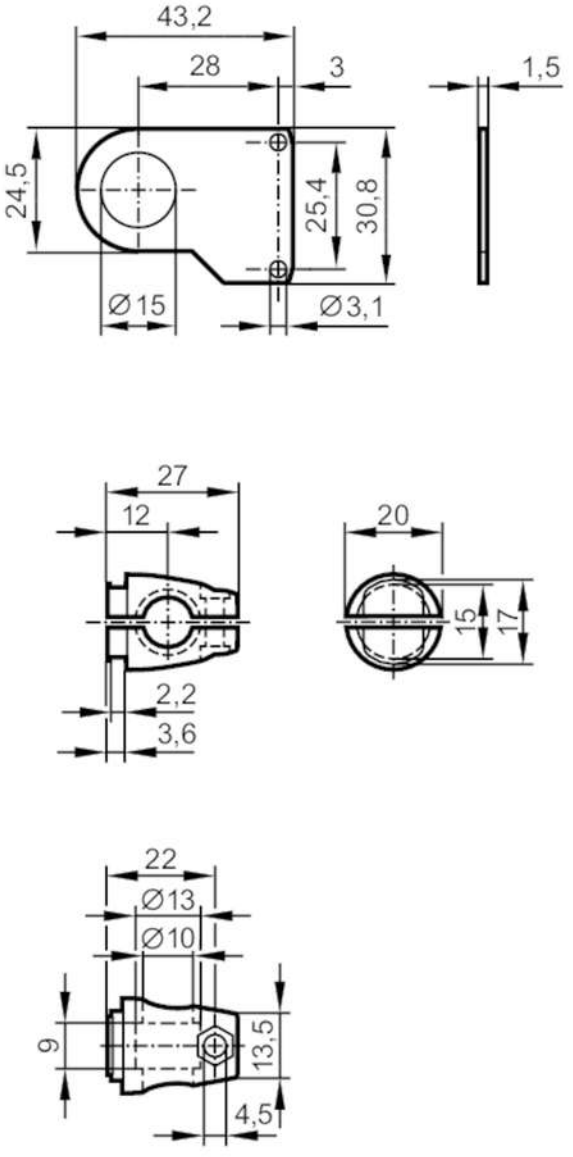

Application		
Design		clamp mounting
Mechanical data		
Weight	[g]	51.8
Type of mounting		Mounting rod; (Ø 10 mm)
Dimensions	[mm]	30.8 x 1.5 x 43.2
Materials		stainless steel (1.4571/316Ti)
Accessories		
Items supplied		cylinder screws: 2 x M3 x 14
		Clamp
		head cap screw
		nut: M4

E21272

Mounting set for photoelectric sensors

O6 CLAMP BRACKET

Remarks	
Pack quantity	1 pcs.