IM0055

Inductive sensor

IMC2020BARKA/LS-100AK RT

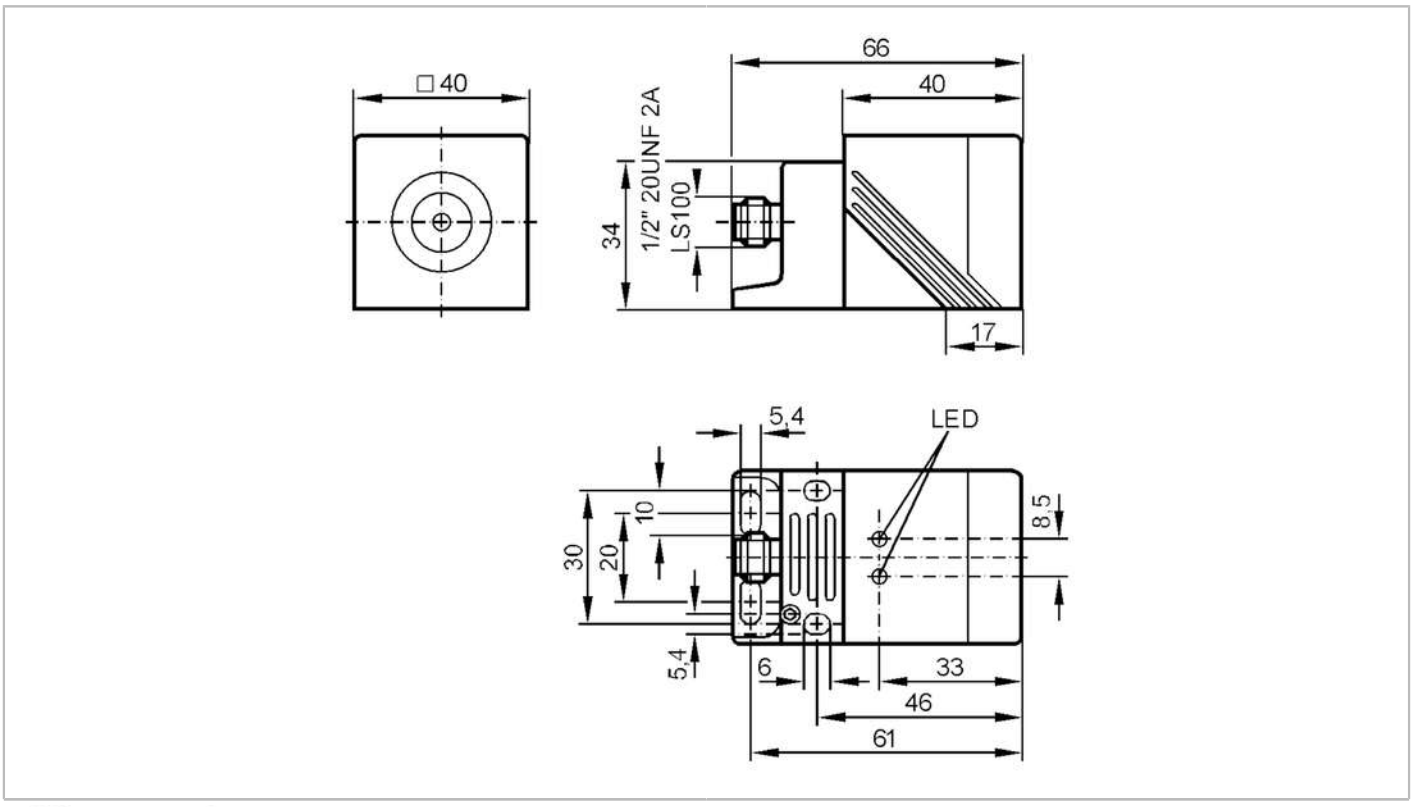

Product characteristics		
Output function		normally open
Sensing range	[mm]	20
Housing		rectangular
Dimensions	[mm]	40 x 40 x 66
Electrical data		
Frequency AC	[Hz]	47...63
Operating voltage	[V]	20...140 AC / 10...140 DC
Protection class		I
Reverse polarity protection		yes
Outputs		
Output function		normally open
Max. voltage drop switching output DC	[V]	5.5
Max. voltage drop switching output AC	[V]	5.5
Minimum load current	[mA]	5.5
Max. leakage current	[mA]	1.7 (140 V AC/DC)
Permanent current rating of switching output AC	[mA]	450
Permanent current rating of switching output DC	[mA]	450
Short-time current rating of switching output	[mA]	2200; (20 ms / 0,5 Hz)

IM0055

Inductive sensor

IMC2020BARKA/LS-100AK RT

Switching frequency AC	[Hz]	25	
Switching frequency DC	[Hz]	100	
Short-circuit protection		yes	
Type of short-circuit protection		pulsed	
Overload protection		yes	
Detection zone			
Sensing range	[mm]	20	
Real sensing range Sr	[mm]	20 ± 10 %	
Operating distance	[mm]	0...16.2	
Accuracy / deviations			
Correction factor		steel: 1 / stainless steel: 0.7 / brass: 0.4 / aluminium: 0.4 / copper: 0.3	
Hysteresis	[% of Sr]	3...20	
Switch point drift	[% of Sr]	-10...10	
Operating conditions			
Ambient temperature	[°C]	-25...70	
Protection		IP 67	
Tests / approvals			
EMC		EN 60947-5-2	
MTTF	[years]	351	
UL approval		Ta	0...40 °C
		Enclosure type	Type 1
		power supply	Hazardous voltage
		File number UL	E174191
Mechanical data			
Weight	[g]	259.5	
Housing		rectangular	
Mounting		flush mountable	
Dimensions	[mm]	40 x 40 x 66	
Materials		housing: PPE; sensing face: PPE orange; end cap: diecast zinc; clamp: diecast zinc black; screw: steel galvanised	
Displays / operating elements			
Display		switching status	1 x LED, red
		operation	1 x LED, green
		short circuit	1 x LED, green/red alternately flashing
Remarks			
Remarks		5 positions of the active zone possible	
Pack quantity		1 pcs.	

IM0055

Inductive sensor

IMC2020BARKA/LS-100AK **RT**

Electrical connection - plug

Connector: 1 x 1/2"; coding: C; Locking: brass, white bronze coated

