Max. 222 m³/h

DC axial fans

☐ 80 x 38 mm



- **Material:** Housing: GRP[1)] (PBT)
  Impeller: GRP[1)] (PA)
- **Direction of air flow:** Exhaust over struts
- **Direction of rotation:** Counterclockwise, looking towards rotor
- **Connection:** Via single wires AWG 24 (H3 and H4: AWG 22), TR 64
- **Weight:** 160 g (H3 and H4: 200 g)

- **Possible special versions:**
  (See chapter DC fans - specials)
  - Speed signal
  - Go / NoGo alarm
  - Alarm with speed limit
  - External temperature sensor
  - Internal temperature sensor
  - PWM control input
  - Analog control input
  - Moisture protection
  - Degree of protection: IP 54 / IP 68

1) Fiberglass-reinforced plastic

Series 8200 J VWC0080JUFBS **Nominal data**	Air flow	Air flow	**Nominal voltage**	Voltage range	Sound pressure level	Sound power level	Sintec sleeve bearings Ball bearings	Power consumption	Nominal speed	Temperature range	Service life L_{10} (40 °C) ebm-papst standard Service life L_{10} (T_{max}) ebm-papst standard	Life expectancy L_{10IPC} (40 °C) see page 15	Curve
Type	**m³/h**	**cfm**	**VDC**	**VDC**	**dB(A)**	**Bel(A)**	**□ / ■**	**Watts**	**rpm⁻¹**	**°C**	**Hours**	**Hours**	
8212 JN	132	78	**12**	7...13.8	55	6.6	■	10	8 400	-20...+70	62 500 / 32 500	105 000	①
8212 JH3 *S-Force*	190	112	**12**	6...13.8	66	7.3	■	26*	12 000	-20...+70	55 000 / 27 500	92 500	②
8212 JH4 *S-Force*	222	131	**12**	6...13.8	71	7.8	■	39*	14 000	-20...+70	50 000 / 25 000	85 000	③
8214 JN	132	78	**24**	18...26.4	55	6.6	■	11	8 400	-20...+70	62 500 / 32 500	105 000	①
8214 JH3 *S-Force*	190	112	**24**	12...27.6	66	7.3	■	26*	12 000	-20...+70	55 000 / 27 500	92 500	②
8214 JH4 *S-Force*	222	131	**24**	12...27.6	71	7.8	■	38*	14 000	-20...+70	50 000 / 25 000	85 000	③
8218 JN	132	78	**48**	36...53	55	6.6	■	11	8 400	-20...+70	62 500 / 32 500	105 000	①
8218 JH3 *S-Force*	190	112	**48**	36...53	66	7.3	■	25*	12 000	-20...+70	55 000 / 27 500	92 500	②
8218 JH4 *S-Force*	222	131	**48**	20...58	71	7.8	■	36*	14 000	-20...+70	50 000 / 25 000	85 000	③

Subject to change

8200 JH3 and JH4 also available as standard with PWM control input and speed signal.
Speed control range from 2000 rpm⁻¹ up to maximum nominal speed. Standstill at 0% PWM, maximum speed if control cable is interrupted.
* Power consumption at free air flow. These values can be significantly higher in the operating point.

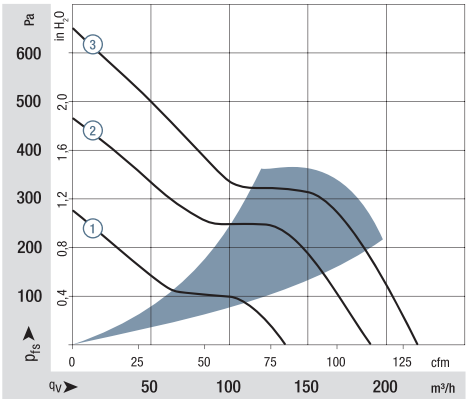

Air performance measured according to: ISO 5801.
Installation category A, without contact protection.
Noise: Total sound power level L_{WA} ISO 10302 measured on a hemisphere with a radius of 2 m.
Sound pressure level L_{pA} measured at 1 m distance from fan axis.
The values given are applicable only under the specified measuring conditions and may differ depending on the installation conditions.
In the event of deviation from the standard configuration, the parameters must be checked after installation!
For detailed information see
http://www.ebmpapst.com/general conditions

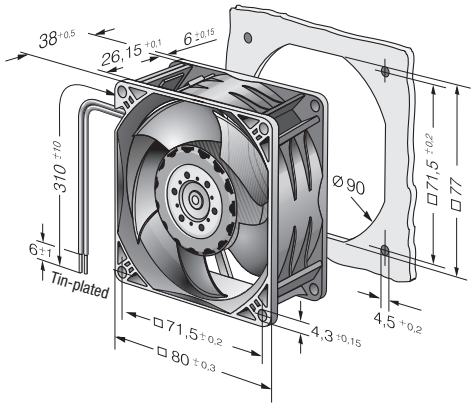

ebmpapst