E11996

Mounting clamp for position sensors

MOUNTING CLAMP M30

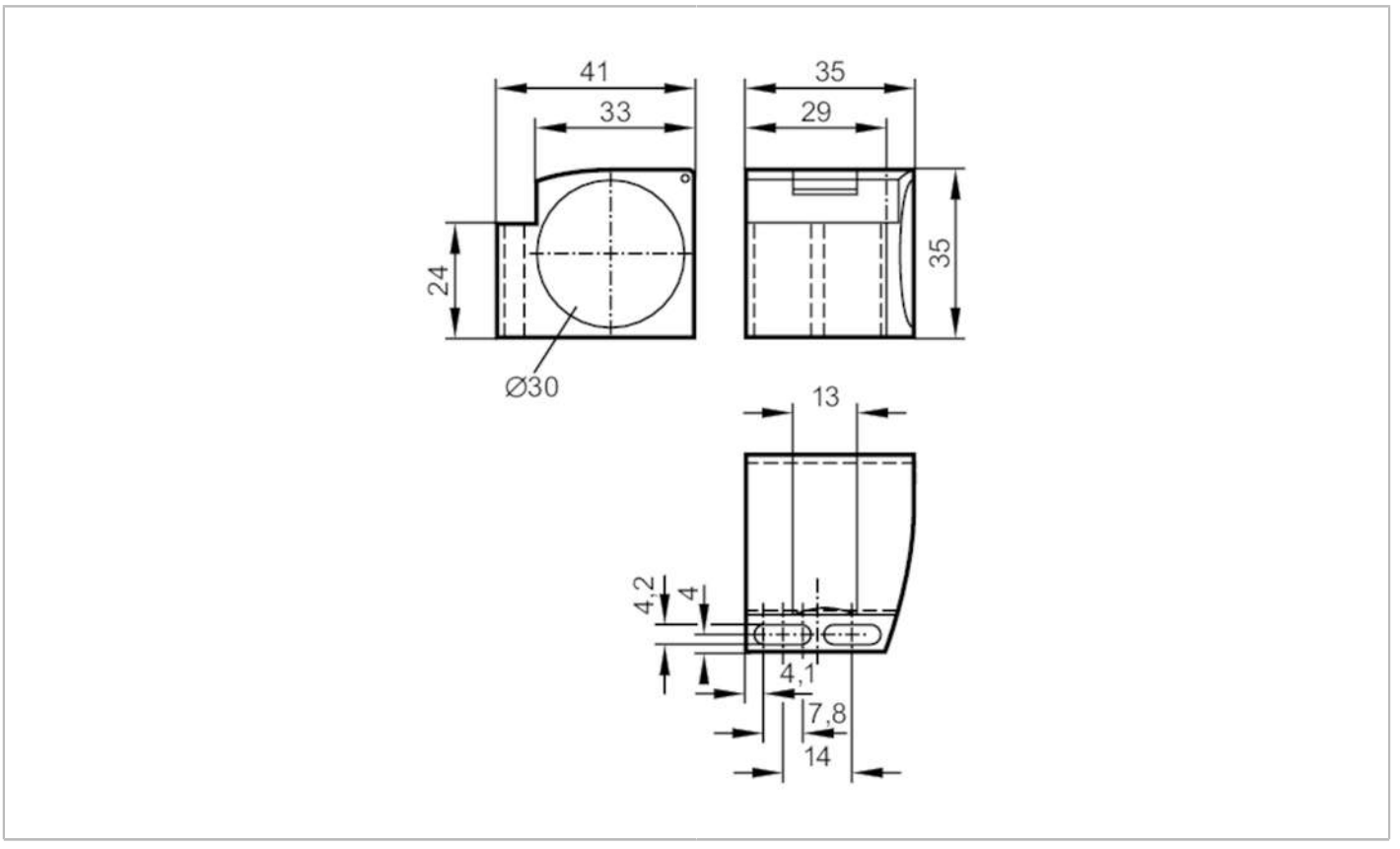

Application		
Design		with end stop
Installation		for sensors with 45° chamfer
Operating conditions		
Ambient temperature	[°C]	-25...85
Mechanical data		
Weight	[g]	24
Dimensions	[mm]	35 x 35 x 41
Inside diameter	[mm]	30
Materials		PC
Remarks		
Pack quantity		1 pcs.