PHE 1020TGRSB

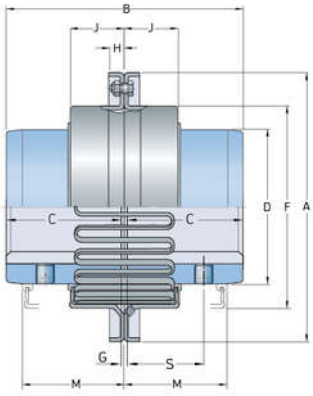

Size	1020
Nominal torque (lbft)	38.35
Nominal torque (Nm)	52
Min. bore (mm)	13
Max speed (r/min)	4500
Min. bore (in)	0.5
Max. bore (mm)	30
Max. bore (in)	1.18
Weight (kg)	0.56
Weight (lbs)	1.23

® SKF is a registered trademark of the SKF Group
© SKF Group 2012
The contents of this publication are the copyright of the publisher and may not be reproduced (even extracts) unless prior written permission is granted. Every care has been taken to ensure the accuracy of the information contained in this publication but no liability can be accepted for any loss or damage whether direct, indirect or consequential arising out of the use of the information contained herein.