# KI6001

## Capacitive sensor

KI-3250NFPKG/PL/2P/IO

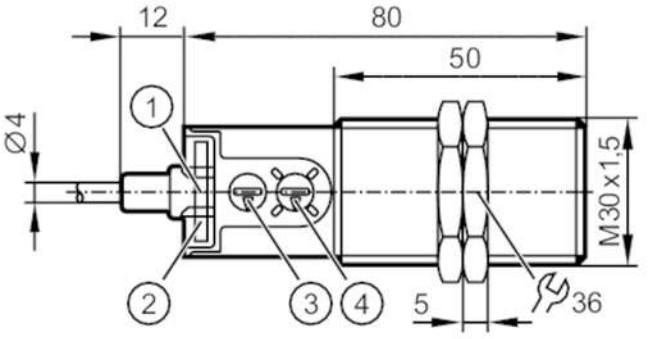


1 LED yellow switching status
2 LED green signal
3 potentiometer Sensing range
4 potentiometer Switching function

| | | |
|---|---|---|
| **Product characteristics** | | |
| Electrical design | | PNP |
| Output function | | normally open / normally closed; (selectable) |
| Sensing range | [mm] | 0.5...40 |
| Communication interface | | IO-Link |
| Housing | | threaded type |
| Dimensions | [mm] | M30 x 1.5 / L = 92 |
| **Application** | | |
| Special feature | | Optical setting aid |
| Medium temperature | [°C] | -25...110 |
| **Electrical data** | | |
| Operating voltage | [V] | 10...30 DC |
| Current consumption | [mA] | < 22 |
| Protection class | | III |
| Reverse polarity protection | | yes |
| **Outputs** | | |
| Electrical design | | PNP |
| Output function | | normally open / normally closed; (selectable) |
| Max. voltage drop switching output DC | [V] | 2.5 |
| Permanent current rating of switching output DC | [mA] | 200 |
| Switching frequency DC | [Hz] | 30 |
| Short-circuit proof | | yes |
| Overload protection | | yes |
| **Detection zone** | | |
| Sensing range | [mm] | 0.5...40 |
| Sensing range adjustable | | yes |
| Factory setting sensing range | [mm] | 25 |
| Real sensing range Sr | [mm] | 25 ± 10 % |

# KI6001

## Capacitive sensor

KI-3250NFPKG/PL/2P/IO

| | | | |
|---|---|---|---|
| **Accuracy / deviations** | | | |
| Hysteresis | [% of Sr] | 1...15 | |
| Switch point drift | [% of Sr] | -10...10 | |
| **Interfaces** | | | |
| Communication interface | | IO-Link | |
| Transmission type | | COM2 (38,4 kBaud) | |
| IO-Link revision | | 1.1 | |
| SDCI standard | | IEC 61131-9 | |
| Profiles | | Smart Sensor: Process Data Variable; Device Identification | |
| SIO mode | | yes | |
| Required master port type | | A | |
| Min. process cycle time | [ms] | 20 | |
| IO-Link functions (acyclical) | | application specific tag; operating hours counter; normally open / normally closed (configurable); PNP / NPN (parametrierbar); switch point setting; Hysteresis | |
| **Operating conditions** | | | |
| Ambient temperature | [°C] | -25...80 | |
| Protection | | IP 65; IP 67; IP 69K | |
| **Tests / approvals** | | | |
| EMC | | EN 61000-4-2 | 30 kV AD / 4 kV CD |
| | | EN 61000-4-3 | 10 V/m |
| | | EN 61000-4-4 | 2 kV |
| | | EN 61000-4-6 | 10 V |
| | | EN 55011 | class B |
| Vibration resistance | | DIN EN 60947-5-2 | 1 mm amplitude, oscillation period 5 min., 30 min. per axis at resonance or 55 Hz |
| Shock resistance | | DIN EN 60947-5-2 | 30 g 6 shocks / 11 ms half-sine (x, y, z) |
| UL approval | | Ta | -25...60 °C |
| | | Enclosure type | Type 1 |
| | | power supply | Limited Voltage/Current |
| | | UL Approval no. | D002 |
| | | File number UL | E174191 |
| **Mechanical data** | | | |
| Weight | [g] | 100.2 | |
| Housing | | threaded type | |
| Mounting | | non-flush mountable | |
| Dimensions | [mm] | M30 x 1.5 / L = 92 | |
| Thread designation | | M30 x 1.5 | |
| Materials | | PBT; PC; POM | |
| **Displays / operating elements** | | | |
| Display | | switching status | 1 x LED, yellow |
| | | operation | 1 x LED, green |
| | | setting aid | 12 x LED, green |
| Optical setting aid | | yes | |
| **Accessories** | | | |
| Items supplied | | lock nuts: 2 | |

# KI6001

## Capacitive sensor

**KI-3250NFPKG/PL/2P/IO**

## Remarks

| | |
|---|---|
| Pack quantity | 1 pcs. |

## Electrical connection

Cable: 2 m, PUR, Ø 4 mm; 3 x 0.34 mm²

### Connection

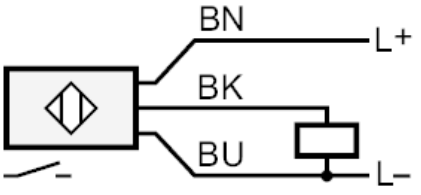


| | |
|---|---|
| BK: | OUT / IO-Link |
| | Core colours : |
| BK = | black |
| BN = | brown |
| BU = | blue |