Modular Signal Towers / KombiSIGN 72

KS72 Design BWM 24VAC/DC GN/YE/RD



Part No.:	**649.001.01**
Series:	**KombiSIGN 72**

MECHANICAL DATA	
Height	212 mm
Diameter	70 mm
Materials	PA-GF PC
Dome colour	Clear
Housing colour	Silver
Protection category	IP65
Connection	Spring-type terminal
cross-sectional area maximum	1,50mm² / 16AWG
Cable entry	Through hole
Cable entry maximum	d = 11 mm
Tension relief	Not present
Type of fixing	Base mounting Wall mounting
Working temperature minimum	-20°C
Working temperature maximum	+50°C
Weight with packaging	361 g
Product weight	310 g

ELECTRICAL DATA	
Operating voltage	24V
Operating voltage type	AC/DC
Operating voltage frequency	50Hz
Operating voltage tolerance	+/- 10%
Rated operational voltage	24 VDC
Rated operational current	240 mA
Rated inrush current	<500mA
Protection class	Protection class 3
Pollution degree	3

OPTICAL DATA	
Light source	LED
Light colour	Green Red Yellow
Optical signal image	Permanent
Blink frequency (Hz)	1 Hz
Service life optical	50,000 h maximum

! For additional installation and mounting information, refer to the appropriate user guide at www.werma.com. This printed copy is for information only and is subject to alteration.

Modular Signal Towers / KombiSIGN 72

KS72 Design BWM 24VAC/DC GN/YE/RD

DRAWING

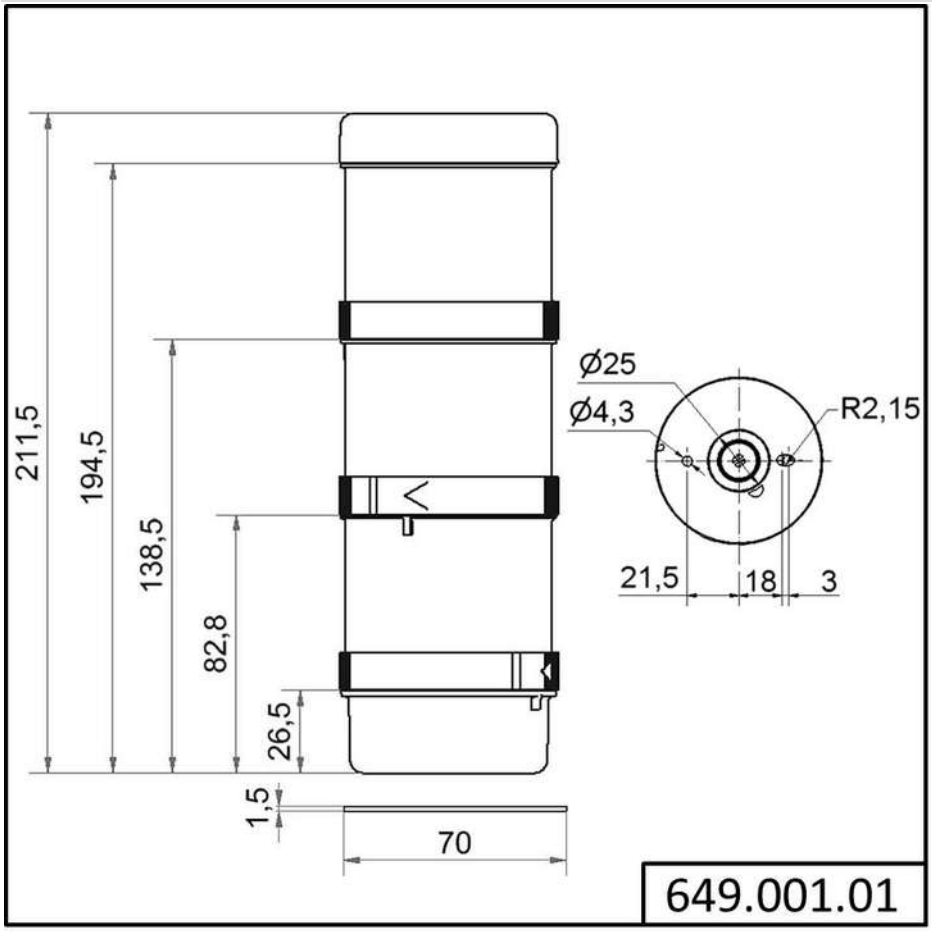

! For additional installation and mounting information, refer to the appropriate user guide at www.werma.com. This printed copy is for information only and is subject to alteration.