Modbus TCP & RTU Master to BACnet/IP & MS/TP Server Application

Item number: IN7004853K00000

Integrate any Modbus RTU or TCP server device, or both simultaneously, with a BACnet BMS or any BACnet/IP or BACnet MS/TP controller. This integration aims to make Modbus signals and resources accessible from a BACnet-based control system or device as if they were a part of the BACnet system and vice versa.



Modbus TCP & RTU to BACnet/IP & MS/TP - 3000 points

Features and benefits

- **BACnet/IP client and MS/TP manager support**
  Both BACnet/IP client and MS/TP manager are supported.
- **Commissioning-friendly approach with Intesis MAPS**
  Templates can be imported and reused as often as needed, significantly reducing commissioning time.
- **BACnet Advanced features - calendars, schedules...**
  BACnet's advanced features, such as calendars, trend logs, schedules, and more, are available.
- **32 RTU devices per port with no repeater (255 max)**
  The gateway supports up to 32 Modbus devices per RTU node (without repeater) and up to 255 in total.
- **Easy integration with Intesis MAPS**
  The integration process is quickly and easily managed using the Intesis MAPS configuration tool.
- **Configuration tool and gateway automatic updates**
  Both the Intesis MAPS configuration tool and the gateway's firmware can receive automatic updates.
- **Two Modbus RTU lines for BACnet/IP integration**
  Two independent Modbus RTU ports are available for BACnet/IP integrations.
- **Template download/generation for Modbus products**
  Modbus device templates can be generated, imported locally, or downloaded from a repository.

Modbus TCP & RTU Master to BACnet/IP & MS/TP Server Application



General

Net Width (mm)	88
Net Height (mm)	90
Net Depth (mm)	58
Net Weight (g)	194
Packed Width (mm)	127
Packed Height (mm)	86
Packed Depth (mm)	140
Packed Weight (g)	356
Operating Temperature °C Min	-10
Operating Temperature °C Max	60
Storage Temperature °C Min	-30
Storage Temperature °C Max	60
Power Consumption (W)	1.7
Input Voltage (V)	For DC: 9 .. 36 VDC, Max: 260 mA, 2.4 W For AC: 24 VAC ±10 %, 50-60 Hz, Max: 100 mA, 2.4 W Recommended voltage: 24 VDC, Max: 100 mA
Power Connector	3-pole
Configuration	Intesis MAPS
Capacity	Up to 3000 points.
Installation Conditions	This gateway is designed to be mounted inside an enclosure. If the unit is mounted outside an enclosure, precautions should always be taken to prevent electrostatic discharge to the unit. When working inside an enclosure (e.g., making adjustments, setting switches, etc.), typical anti-static precautions should always be followed before touching the unit.
Content of Delivery	Intesis Gateway, Installation Manual, USB Configuration cable.

Modbus TCP & RTU Master to BACnet/IP & MS/TP Server Application



General

Not Included (in delivery)	Power supply not included.
Mounting	DIN rail mount (bracket included), Wall mount
Housing Materials	Plastic
Warranty (years)	3 years
Packaging Material	Cardboard

Identification and Status

Product ID	IN7004853K00000_BAC_MBS
Country of Origin	Spain
HS Code	8517620000
Export Control Classification Number (ECCN)	EAR99

Physical Features

Connectors / Input / Output	Power supply, two EIA-485 ports, Ethernet, Console port USB Mini-B type, USB storage, EIA-232.
LED Indicators	Gateway and communication status.
Push Buttons	Factory reset.
DIP & Rotary Switches	EIA-485 serial port configuration.
Battery Description	Manganese Dioxide Lithium button battery.

Certifications and Standards

ETIM Classification	EC001604
WEEE Category	IT and telecommunications equipment

Modbus TCP & RTU Master to BACnet/IP & MS/TP Server Application

Use Case

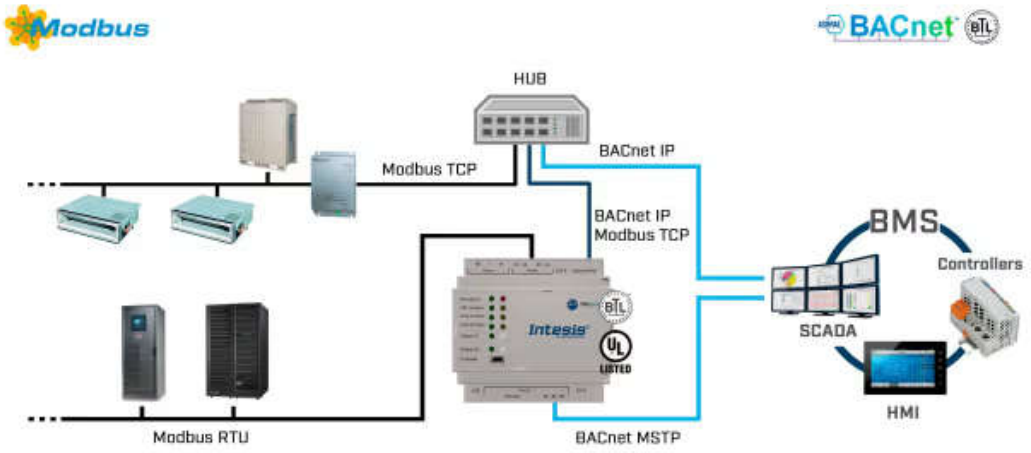

Integration example.

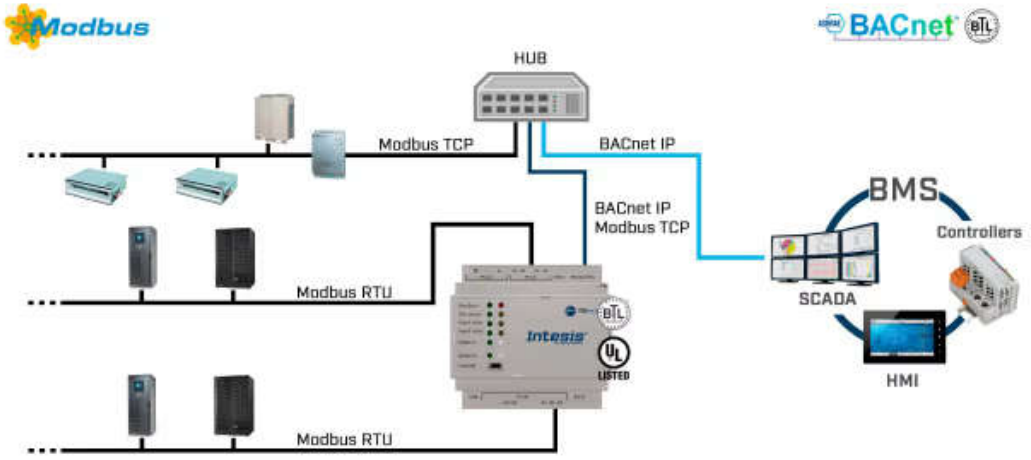

Integration example.

Modbus TCP & RTU Master to BACnet/IP & MS/TP Server Application

Use Case



Use Intesis MAPS to change the protocol: BACnet, Modbus, KNX, or Home Automation