Hand Held Instrument (1593S)

Top View of Assembly

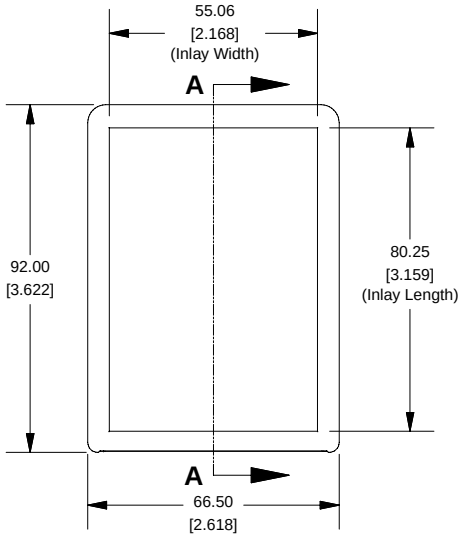

SECTION A-A
(Side View Inside Assembly)

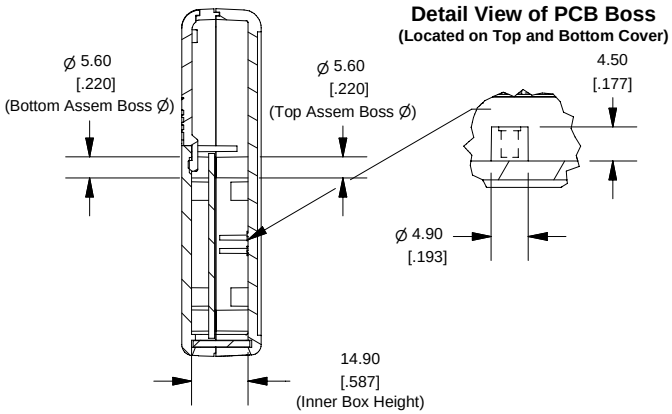

End View of Assembly

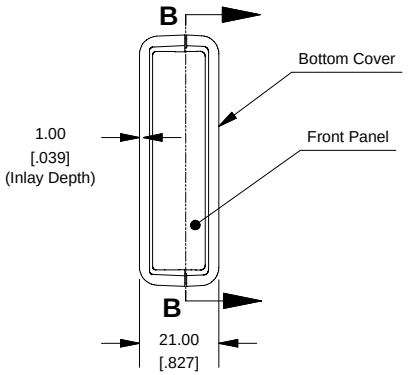

SECTION B-B
(Inside of Bottom Cover)

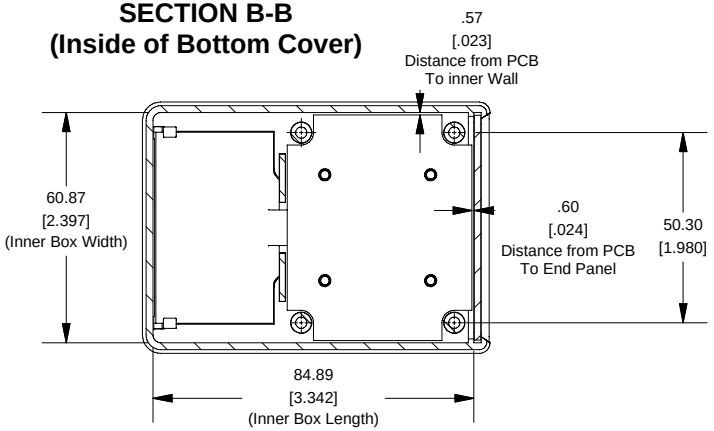

Front/Rear Panel
(Dashed Line Indicates Viewing Area)

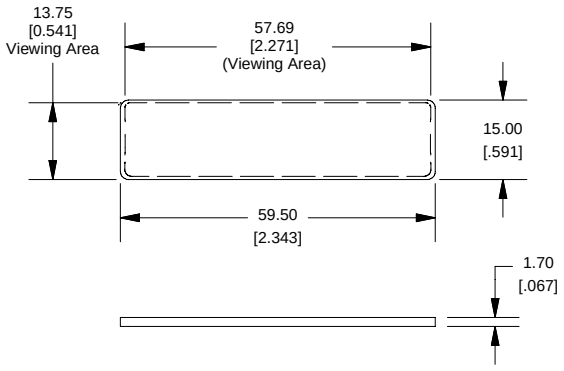

Maximum P.C. Board Size

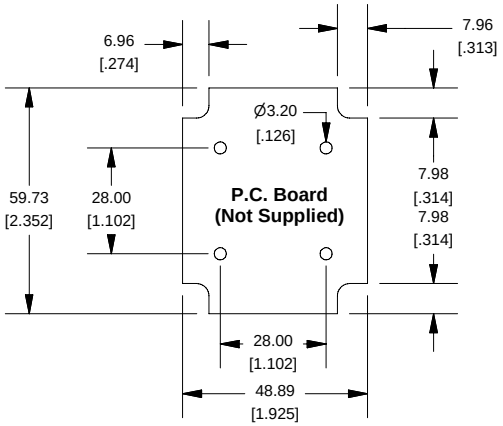

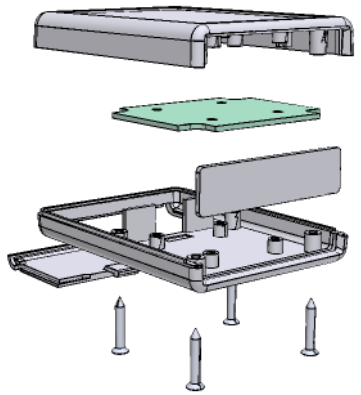

Enclosures can be Factory Modified (Milling, Drilling, Printing etc.)
Solid models of this enclosure available in STEP or IGES.
Contact Factory mjm@hammondmfg.com

NOTE
Enclosure molded from GP ABS (UL94-HB) plastic.
Purchased assembly includes top and bottom cover, front panel (plastic), battery door and 4 cover screws.

PART NUMBERS	
1593S Enclosure	
Black Enclosure	1593SBK
Grey Enclosure	1593SGY
ACCESSORIES	
Cover Screws (Pkg 100) [#4 x 5/8" self-tapping oval head (15.9mm)]	1593MS100 (Silver) 1593MS100BK (Black)
P.C. Board Screws [#4 x 1/4" self-tapping (6.4mm)]	1593ATS50 (Pkg 50) 1593ATS100 (Pkg 100)
Belt or Pocket Clip	1599CLIP (Black) 1599CLIPGY (Grey)
Infrared Panels (Pkg 10)	1593DIR10

HAMMOND MANUFACTURING™

1593S

www.hammondmfg.com