

Model Number

UC4000-30GM-2EP-IO-V15

Single head system

Features

- **IO-link interface for service and process data**
- **Programmable via DTM with PACTWARE**
- **2 programmable switch outputs**
- **Selectable sound lobe width**
- **Latching mode selectable**
- **Window function can be selected**
- **Synchronization options**
- **Temperature compensation**

Diagrams

Characteristic response curve

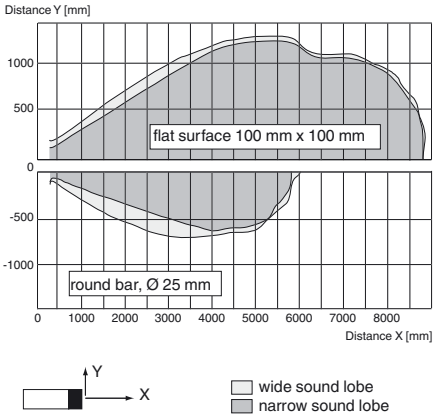

Technical data

General specifications	
Sensing range	200 ... 4000 mm
Adjustment range	240 ... 4000 mm
Unusable area	0 ... 200 mm
Standard target plate	100 mm x 100 mm
Transducer frequency	approx. 85 kHz
Response delay	Ex works settings: ≤ 225 ms configurable
Memory	
Non-volatile memory	EEPROM
Write cycles	100000
Indicators/operating means	
LED green	solid: Power on flashing: Standby mode or IO link communication
LED yellow 1	solid: Object in evaluation range flashing: Learning function, object detected
LED yellow 2	solid: Object in evaluation range flashing: Learning function, object detected
LED red	solid red: Error red, flashing: program function, object not detected
Electrical specifications	
Operating voltage U_B	10 ... 30 V DC , ripple 10 %$_{SS}$
No-load supply current I_0	≤ 60 mA
Power consumption P_0	≤ 1 W
Time delay before availability t_v	≤ 150 ms
Interface	
Interface type	IO-Link
Protocol	IO-Link V1.0
Transfer rate	Acyclical: typical 54 Bit/s
Cycle time	min. 59.2 ms
Mode	COM 2 (38.4 kBaud)
Process data witdh	16 bit
SIO mode support	yes
Input/Output	
Input/output type	1 synchronization connection, bidirectional
0 Level	0 ... 1 V
1 Level	4 V ... U_B
Input impedance	> 12 kΩ
Output rated operating current	< 12 mA
Pulse length	0.5 ... 300 ms (level 1)
Pulse interval	≥ 62 ms (level 0)
Synchronization frequency	
Common mode operation	≤ 16 Hz
Multiplex operation	≤ 17 Hz / n , n = number of sensors , n ≤ 10 (factory setting: n = 5)
Output	
Output type	2 push-pull (4 in 1) outputs, short-circuit protected, reverse polarity protected
Rated operating current I_e	200 mA , short-circuit/overload protected
Voltage drop U_d	≤ 2.5 V
Repeat accuracy	≤ 0.1 % of full-scale value
Switching frequency f	≤ 2 Hz
Range hysteresis H	1 % of the adjusted operating range (default settings), programmable
Temperature influence	≤ 1.5 % from full-scale value (with temperature compensation) ≤ 0.2 %/K (without temperature compensation)
Ambient conditions	
Ambient temperature	-25 ... 70 °C (-13 ... 158 °F)
Storage temperature	-40 ... 85 °C (-40 ... 185 °F)
Mechanical specifications	
Connection type	Connector M12 x 1 , 5-pin
Protection degree	IP67
Material	
Housing	Stainless steel 1.4305 / AISI 303 TPU Polyamides
Transducer	epoxy resin/hollow glass sphere mixture; polyurethane foam
Mass	95 g
Factory settings	
Output 1	near switch point: 240 mm far switch point: 4000 mm output function: Window operation mode output behavior: NO contact
Output 2	near switch point: 500 mm far switch point: 2000 mm output function: Window operation mode output behavior: NO contact
Beam width	wide
Compliance with standards and directives	
Standard conformity	

Release date: 2013-11-22 10:15 Date of issue: 2013-11-22 191244_eng.xml

Standards	EN 60947-5-2:2007 IEC 60947-5-2:2007

Approvals and certificates	
UL approval	cULus Listed, General Purpose
CSA approval	cCSAus Listed, General Purpose
CCC approval	CCC approval / marking not required for products rated ≤36 V

Dimensions

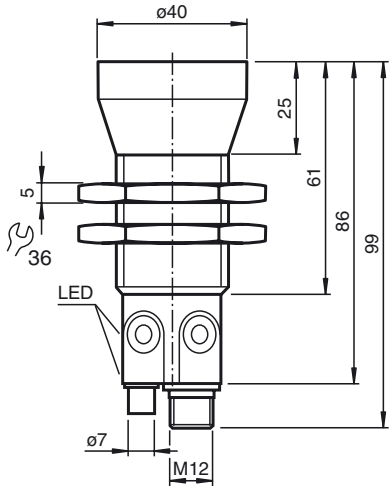

Electrical Connection

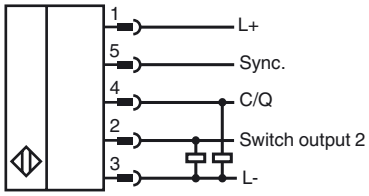

Pinout

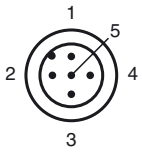

Additional Information

Switching output operating modes

1. Trip point mode

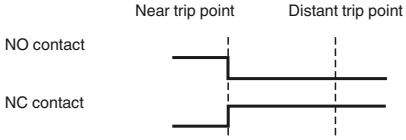

2. Window mode

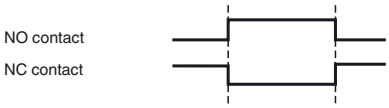

3. Hysteresis mode

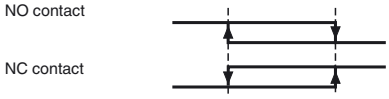

4. Ultrasonic sensor mode

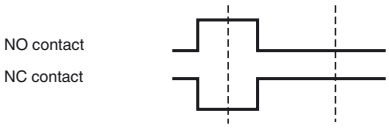

Release date: 2013-11-22 10:15 Date of issue: 2013-11-22 191244_eng.xml

Refer to “General Notes Relating to Pepperl+Fuchs Product Information”.
Pepperl+Fuchs Group www.pepperl-fuchs.com
USA: +1 330 486 0001 fa-info@us.pepperl-fuchs.com
Germany: +49 621 776 4411 fa-info@de.pepperl-fuchs.com
Singapore: +65 6779 9091 fa-info@sg.pepperl-fuchs.com
PEPPERL+FUCHS SENSING YOUR NEEDS

Wire colors in accordance with EN 60947-5-2

1	BN	(brown)
2	WH	(white)
3	BU	(blue)
4	BK	(black)
5	GY	(gray)

Accessories

BF 30
Mounting flange, 30 mm

BF 30-F
Mounting flange with dead stop, 30 mm

BF 5-30
Universal mounting bracket for cylindrical sensors with a diameter of 5 ... 30 mm

V15-W-2M-PUR
Female cordset, M12, 5-pin, PUR cable

V15-W-2M-PVC
Female cordset, M12, 5-pin, PVC cable

IO-Link-Master02-USB
IO-Link master, supply via USB port or separate power supply, LED indicators, M12 plug for sensor connection

IO-Link-Master-USB DTM
Communication DTM for use of IO-Link-Master

IODD Interpreter DTM
Software for the integration of IODDs in a frame application (e. g. PACTware)

PACTware 4.X
FDT-Framework

Microsoft .NET

Description of Sensor Functions

Programming

The sensor is equipped with two outputs. Two trip points or trip values, as well as the output mode, can be programmed for each output. The shape of the sensor sound cone can also be programmed. These parameters can be configured using two different methods:

- Using the sensor push buttons
- Using the IO-link interface of the sensor. This method requires an IO-link master (e.g. IO-link master01 USB) and the associated software. The download link is available on the product page for the sensor with the IO link at www.pepperl-fuchs.de

Configuration using the push buttons is described below. To configure the parameters using the sensor IO-link interface, please read the software description. The processes for configuring the trip points and the sensor operating modes run completely independently and do not influence one another.

Note:

- The sensor can only be programmed during the first 5 minutes after switching on. This time is extended during the actual programming process. The option of programming the sensor is revoked if no programming activities take place for 5 minutes. After this, programming is no longer possible until the sensor is switched off and on again.
- The programming activities can be canceled at any time without changing the sensor settings. To do so, press and hold the push button for 10 seconds.

Programming the trip points

Note:

Each push button is assigned to a physical output. Switching output 1 (C/Q) is programmed via push button T1. Switching output 2 is programmed via push button T2. The status of switching output 1 is indicated by the yellow LED L1. The status of switching output 2 is indicated by the yellow LED L2.

Programming the near trip point

1. Position the object at the site of the required near trip point.
2. Press and hold the push button for 2 seconds (yellow LED flashes).
3. Briefly press the push button (green LED flashes 3 times as confirmation). The sensor returns to normal mode.

Programming the distant trip point

1. Position the object at the site of the required distant trip point
2. Press and hold the push button for 2 seconds (yellow LED flashes)
3. Press and hold the push button for 2 seconds (green LED flashes 3 times as confirmation). The sensor returns to normal mode.

Programming the operating mode

The sensor features a 3-stage process for programming the sensor operating modes. You can program the following with this process:

1. Output function
2. Output behavior of the switching output
3. The shape of the sound cone

Release date: 2013-11-22 10:15 Date of issue: 2013-11-22 191244_eng.xml

These two stages of the process are programmed in succession. To switch from one programming function to the next, press and hold the push button for 2 seconds.

Accessing the programming routine

The operating mode can be programmed separately for each of the two switching outputs. The switching output 1 (C/Q) operating mode is programmed via push button T1. The switching output 2 operating mode is programmed via push button T2.
To access the programming routine for the sensor operating mode, press the push button for 5 seconds.

Programming the output function of the switching output

The green LED is now flashing. The number of flashes indicates the output function currently programmed:

1x: Trip point function
2x: Window function
3x: Hysteresis function
4x: Ultrasonic sensor

1. Briefly press the push button to navigate through the output functions in succession. Use this method to choose the required output function.
2. Press and hold the push button for 2 seconds to save the selection and switch to the programming routine for the output behavior.

Programming the output behavior for the switching output

The yellow LED is now flashing. The number of flashes indicates the output behavior currently programmed:

1x: NO contact
2x: NC contact

1. Briefly press the push button to switch between the possible output behaviors in succession. Use this method to choose the output behavior.
2. Press and hold the push button for 2 seconds to save the selection and switch to the programming routine for the sound cone.

Programming the shape of the sound cone

The red LED is now flashing. The number of flashes indicates the sound cone shape currently programmed:

1x: narrow
2x: medium
3x: wide

1. Briefly press the push button to navigate through the different sound cone shapes in succession. Use this method to choose the required sound cone shape.
2. Press and hold the push button for 2 seconds to return to normal mode.

Note

The last sound cone shape programmed applies for both outputs in equal measure.

Resetting the sensor to the factory settings

The sensor can be reset to the original factory settings.

1. Disconnect the sensor from the power supply
2. Press and hold one of the push buttons
3. Connect the power supply (yellow and red LEDs flash simultaneously for 5 seconds, followed by the yellow and green LEDs flashing simultaneously)
4. Release the push button

The sensor will now function with the original factory settings.

Factory settings

See technical data.

Indicators

The sensor has four LEDs for indicating the status and two buttons for setting parameters.

	LED, green	LED L1, yellow	LED L2, yellow	LED, red
In normal mode				
Error-free operation	On	The output status retains the last status	The output status retains the last status	Off
Fault (e.g. compressed air)	Off			On
When programming the trip points or trip values				
Object detected	Off	Flashes	Flashes	Off
No object detected	Off	Off	Off	Flashes
Confirmation, programming successful	Flashes 3x	Off	Off	Off
Warning, programming invalid	Off	Off	Off	Flashes 3x
When programming the operating mode				
Programming the output function	Flashes	Off	Off	Off
Programming the output behavior	Off	Flashes	Flashes	Off
Programming the sound cone	Off	Off	Off	Flashes

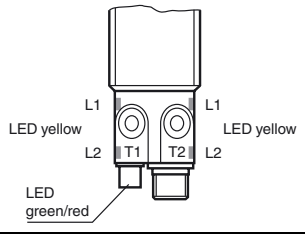

Release date: 2013-11-22 10:15 Date of issue: 2013-11-22 191244_eng.xml

Synchronization

The sensor is fitted with a synchronization input that suppresses mutual interference from external ultrasonic signals. If this input is not connected, the sensor operates with internally generated cycle pulses. The sensor can be synchronized by creating external rectangular pulses and by setting the appropriate parameters via the IO-link interface. Each falling pulse edge sends an individual ultrasonic pulse. If the signal at the synchronization input is low for ≥1 second, the sensor reverts to the normal, unsynchronized operating mode. This also occurs if the synchronization input is disconnected from external signals (see note below).
If a high signal is applied to the synchronization input for > 1 second, the sensor switches to standby. This is indicated by the green LED. In this operating mode, the last recorded output statuses are retained. Please observe the software description in the event of external synchronization.
Note:
If the option of synchronizing is not used, the synchronization input must be connected to ground (L-) or the sensor must be operated with a V1-connection cable (4-pin).
The option of synchronization is not available during the programming process. During synchronization, the sensor can switch to programming via the IO-link interface. This interrupts the synchronization process and the sensor is no longer synchronized.

The following synchronization modes are available:

1. Multiple sensors (see Technical data for the maximum number) can be synchronized by connecting the synchronization inputs on the sensors. In this case, the sensors synchronize themselves in succession in multiplex mode. Only one sensor sends signals at any one time. (See note below)
2. Multiple sensors (see Technical data for the maximum number) can be synchronized by connecting the synchronization inputs on the sensors. The sensor interface can be used to parameterize the sensors so that one functions as a master and the others function as slaves. (See interface description) In this case, the sensors in master/slave mode work simultaneously, i.e. in synchronization where the master sensor plays the role of an intelligent external impulse generator.
3. Multiple sensors can be controlled collectively by an external signal. In this case, the sensors are triggered in parallel and operate synchronously, i.e. at the same time. All sensors must be parameterized via the sensor interface so that they are set to external. See the software description.
4. Several sensors are controlled with a time delay by an external signal. In this case, only one sensor is externally synchronized at any one time (see note below). All sensors must be parameterized via the sensor interface so that they are set to external. See the software description.
5. A high signal (L+) or a low signal (L-) at the synchronization input switches the sensor to standby in the case of external parameterization.

Note:
The response time of the sensors increases in proportion to the number of sensors in the synchronization chain. In multiplex mode, the measuring cycles of the individual sensors run in succession in a chronological sequence.
Note:
The synchronization connection of the sensors supplies an output current in the case of a low signal, and generates an input impedance in the case of a high signal. Please note that the synchronizing device must have the following driver properties:
Driver current according to L+ ≥ n * high level signal/input impedance (n = number of sensors to be synchronized)
Driver current according to L- ≥ n * output current (n = number of sensors to be synchronized).

Release date: 2013-11-22 10:15 Date of issue: 2013-11-22 191244_eng.xml