E43016

Mounting clamp for level sensors

MOUNTING SET D16

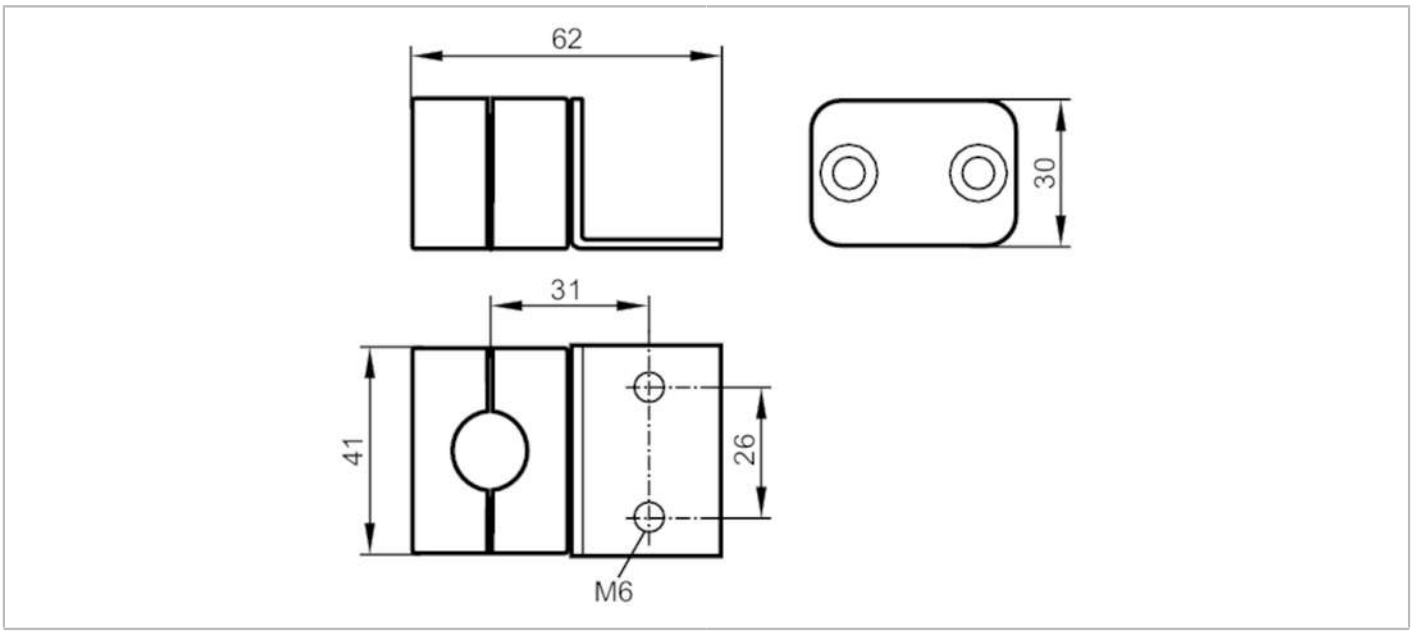

Application		
Design		for capacitive level sensors LK, LI, LT, LL
Mechanical data		
Weight	[g]	101.5
Dimensions	[mm]	62 x 41 x 30
Inside diameter	[mm]	16
Materials		PP; metal parts: steel galvanised
Tightening torque	[Nm]	2.5
Remarks		
Pack quantity		1 pcs.