RTA Series
1–4 Poles Coded Rotary Switches



Features/Benefits

- *PCB or hand soldering versions*
- *Bushing mounting*
- *Multiple poles*
- *Decimal and hexadecimal codes*
- *Screwdriver slot or extended actuator*
- *RoHS Compliant*

Typical Applications

- *Appliances*
- *Electronic alarm systems*
- *Medical*
- *Building automation*
- *HVAC air conditioning*

Electrical Data

	Silver	Gold
SWITCHING MODE:	BBM	BBM
MAX. SWITCHING POWER	5 VA	0.5 VA
MAX. SWITCHING CURRENT:	150 mA	20 mA
MAX. CARRYING CURRENT:	5 A	1 A
NOMINAL VOLTAGE AT 50 Hz	60 V	25 V
CONTACT RESISTANCE:	< 150 mΩ	< 150 mΩ
DIELECTRIC STRENGTH AT 50 Hz BETWEEN CONTACTS AND GROUND TERMINALS:	500 V r	500 V r
INSULATION RESISTANCE BETWEEN CONTACTS OR CONTACTS AND FRAME (500 V =):	10^9 Ω	10^9 Ω
NO. OF OPERATIONS:	10,000	10,000
BOUNCE:	< 5 ms	< 5 ms

Environmental Data

OPERATING TEMPERATURE:	–20°C to + 70°C	–20°C to + 70°C
STORAGE TEMPERATURE:	–40°C to + 85°C	–40°C to + 85°C

NOTE: Specifications and materials listed above are for switches with standard options.
For information on specific and custom switches, consult Customer Service Center.

Mechanical Data

MAX. NO. OF BANKS: 1.
OPERATING TORQUE: 5 Ncm±20%.
END STOP TORQUE: < 60 Ncm.
STOP: With/without or adjustable
MOUNTING: By fixed index 9.5 mm (0.374) of center, for bushing mount only

Materials

BUSHING/HOUSING: PETP Thermoplastic
STATIONARY CONTACTS & TERMINALS: Nickel Plated Brass with additional plating of Gold or Silver.
ROTOR: Gold or Silver plated Brass or PCB.
CODING PLATE: PA thermoplastic
ACTUATOR: Polysulfon thermoplastic
HARDWARE: Stop pin: Aluminum. Ball & Spring: Stainless steel. Washer: PA. Nut: Brass.

Build-A-Switch

To order, simply select desired option from each category and place in the appropriate box. Available options are shown and described on pages K-9 thru K-12. For additional options not shown in catalog, consult Customer Service Center.

Designation
RTA

Termination
- P With PC Thru-hole
- C With Solder Lugs
- H Horizontal with PC Thru-hole

Indexing
- 2 22.5 index (coded only)
- 3 30° index (12 positions max.)
- 4 36° index (10 positions max.)

Switch Function
- 1W12 SP, 30° Index, 12 pos. no stop
- 1W10 SP, 36° Index, 10 pos. no stop
- 1S02 SP, 30° /36° Index, 2 pos.
- 1S03 SP, 30° /36° Index, 3 pos.
- 1S04 SP, 30° /36° Index, 4 pos.
- 1S05 SP, 30° /36° Index, 5 pos.
- 1S06 SP, 30° /36° Index, 6 pos.
- 1S07 SP, 30° /36° Index, 7 pos.
- 1S08 SP, 30° /36° Index, 8 pos.
- 1S09 SP, 30° /36° Index, 9 pos.
- 1S10 SP, 30° /36° Index, 10 pos.
- 1S11 SP, 30° Index, 11 pos.
- 1S12 SP, 30° Index, 12 pos.
- 2S02 DP, 30° /36° Index, 2 pos.
- 2S03 DP, 30° /36° Index, 3 pos.
- 2S04 DP, 30° /36° Index, 4 pos.
- 2S05 DP, 30° /36° Index, 5 pos.
- 2S06 DP, 30° Index, 6 pos.
- 3S02 3P, 30° /36° Index, 2 pos.
- 3S03 3P, 30° /36° Index, 3 pos.
- 4S02 4P, 30° /36° Index, 2 pos.
- EW10 Direct + complement, 36° Index, no stop
- EW12 Direct + complement, 30° Index, no stop
- DW16 Direct, 22.5° Index, no stop
- ES__ Direct + complement, 30°/36° Index, with stop (specify stop position)
- DS__ Direct, 22.5° Index, with stop (specify stop position)

Mounting Style
- W Without bushing
- R 3/8-32 Threaded Bushing
- M M10x.75 Metric Threaded Bushing
- A 3/8-32 Threaded Bushing with Offset Bracket
- B M10x.75 Metric Threaded Bushing with Offset Bracket
- C 3/8-32 Threaded Bushing with Straight Bracket
- D M10x.75 Metric Threaded Bushing with Straight Bracket

Actuator (max.)
- 25N .984 (25,0) with screwdriver slot
- 50N 1.97 (50,0) with screwdriver slot
- FLS Flush shaft with screwdriver slot and position indicator
- 25F .984 (25,0) Shaft with flat
- 06F .236 (6,0) Shaft with flat

Contact Material
- S Silver plated, matte-tin terminal
- P Gold plated, matte-tin terminal

Dimensions are shown: Inch (mm)
Specifications and dimensions subject to change

DESIGNATION

RTA

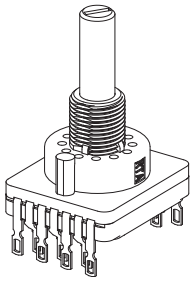

TERMINATION

P WITH PC PINS

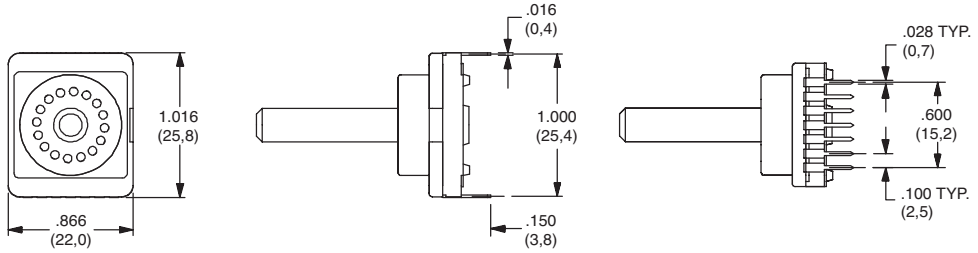



C WITH SOLDER LUGS

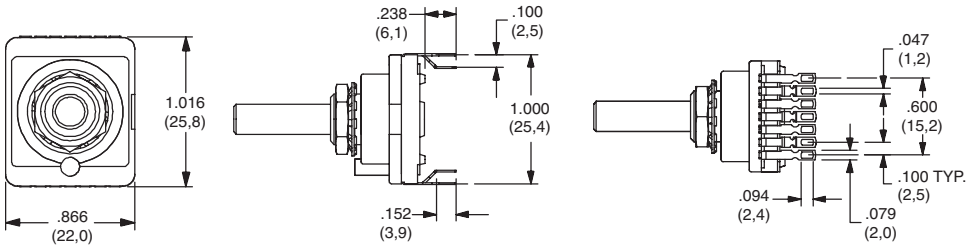



H Horizontal with PC Thru-hole

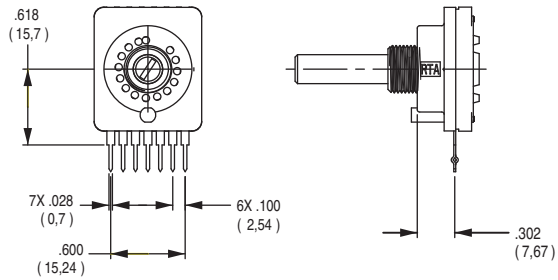

Note: "H" termination only available with the following options:
1. With A or B mounting styles
2. 36° degree indexing
3. Up to 5 positions max

INDEXING

2 22.5 index, 16 positions max.

3 30 index, 12 positions max.

4 36 index, 10 positions max.

Both commons must be connected by user to ground.

Third Angle Projection

Dimensions are shown: mm
Specifications and dimensions subject to change

RTA Series
1-4 Poles Coded Rotary Switches

SWITCH FUNCTION

NO. POLES	MODEL NO.	SWITCH FUNCTION	INDEX
SP	1W12	12 Positions No Stop	30°
	1W10	10 Positions No Stop	36°
	1S02	2 Positions	30°/36°
	1S03	3 Positions	30°/36°
	1S05	5 Positions	30°/36°
	1S06	6 Positions	30°/36°
	1S08	8 Positions	30°/36°
	1S09	9 Positions	30°/36°
	1S10	10 Positions	30°/36°
	1S11	11 Positions	30°
	1S12	12 Positions	30°

SP MODELS SCHEMATIC

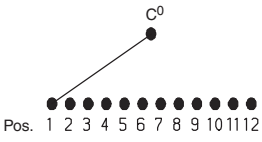

3P MODELS SCHEMATIC

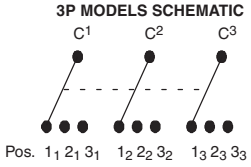

DP MODELS SCHEMATIC

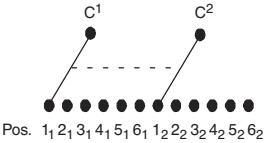

4P MODELS SCHEMATIC

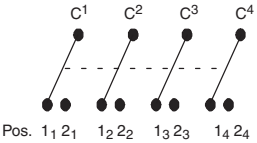

MODEL NO.	SWITCH FUNCTION	INDEX
EW10	Direct + complement, No stop	36°
EW12	Direct + complement, No stop	30°
DW16	Direct, No stop	22.5°
ES__	Direct + complement, with stop (specify stop position)	30° & 36°
DS__	Direct, with stop (specify stop position)	22.5°

NO. POLES	MODEL NO.	SWITCH FUNCTION	INDEX
DP	2W05	5 Positions No Stop	30°/36°
	2W06	6 Positions No Stop	30°
	2S02	2 Positions	30°/36°
	2S03	3 Positions	30°/36°
	2S04	4 Positions	30°/36°
	2S05	5 Positions	30°/36°
	2S06	6 Positions	30°
3P	3S02	2 Positions	30°/36°
	3S03	3 Positions	30°/36°
4P	4S02	2 Positions	30°/36°

22.5° Term.	30° Term.	36° Term.	Pos.	1	2	3	4	5	6	7	8	9	10	11	12	13	14	15	16
E,J	M,N	L,N	C	•	•	•	•	•	•	•	•	•	•	•	•	•	•	•	•
F,I	H	D	1		•		•		•		•		•		•				•
D,K	D	B	2			•	•			•	•			•	•			•	•
A,N	A	I	4					•	•	•	•					•	•	•	•
B	J	J	8									•	•	•	•	•	•	•	•
—	C	K	$\overline{1}$	•		•		•		•		•		•		•		•	
—	K	H	$\overline{2}$	•	•			•	•			•	•			•	•		
—	B	A	$\overline{4}$	•	•	•	•					•	•	•	•				
—	I	C	$\overline{8}$	•	•	•	•	•	•	•	•								

Indexing Option Code 2, 22.5 INDEXING ANGLE PCB LAYOUT

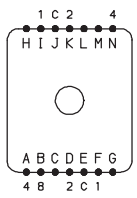

BCD ONLY

Indexing Option Code 3, 30 INDEXING ANGLE PCB LAYOUT

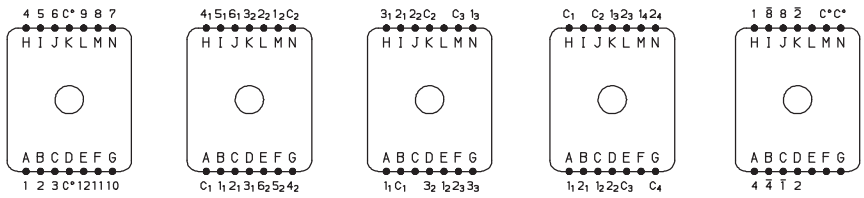

1 POLE | 2 POLES | 3 POLES | 4 POLES | BCD + COMPLEMENTS

Indexing Option Code 4, 36 INDEXING ANGLE PCB LAYOUT

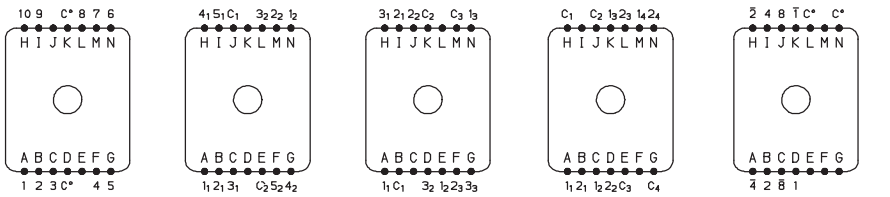

1 POLE | 2 POLES | 3 POLES | 4 POLES | BCD + COMPLEMENTS

NOTE: Layout view from component side.

Common terminals that are in locations A-G are not connected to common terminals that are in locations H-N. For 7-12 position output customer must tie these commons together.

Third Angle Projection

Dimensions are shown: Inch (mm)
Specifications and dimensions subject to change

MOUNTING STYLE

W WITHOUT BUSHING

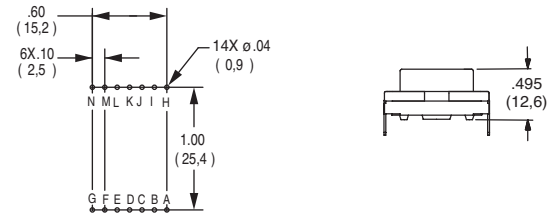

Note: W mounting style not available with H termination.

M M10 x .75 MERTIC THREADED BUSHING

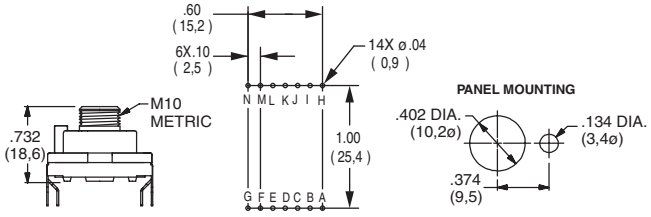

Note: M mounting style not available with H termination.

R 3/8-32 THREADED BUSHING

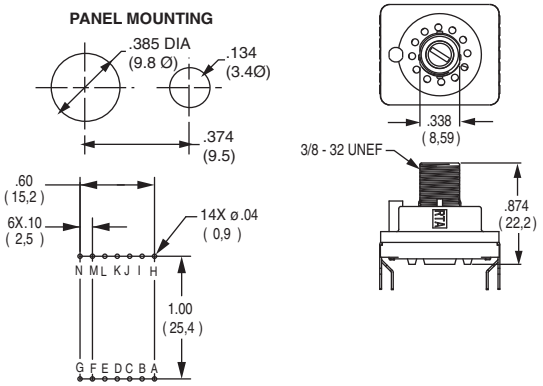

Note: R mounting style not available with H termination.

A 3/8-32 THREADED BUSHING WITH BRACKET

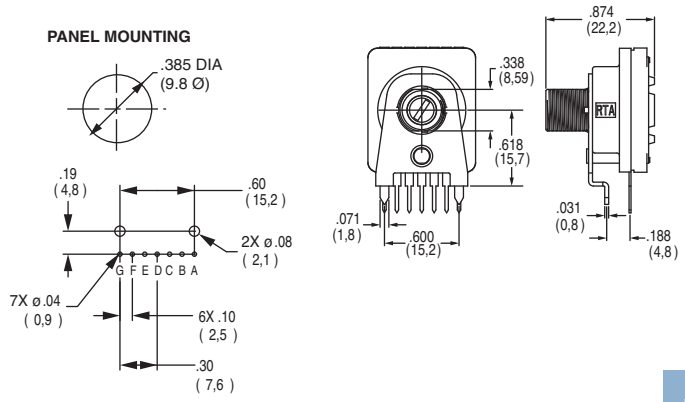

Note: A mounting style only available with H termination.

B M10 x .75 METRIC THREADED BUSHING WITH BRACKET

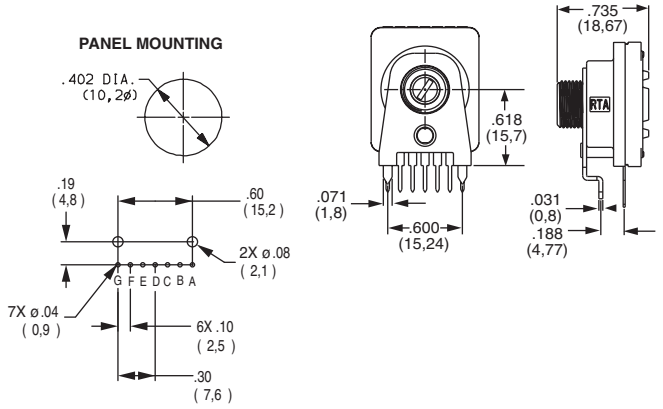

Note: B mounting style only available with H termination.

C 3/8-32 THREADED BUSHING WITH STRAIGHT BRACKET

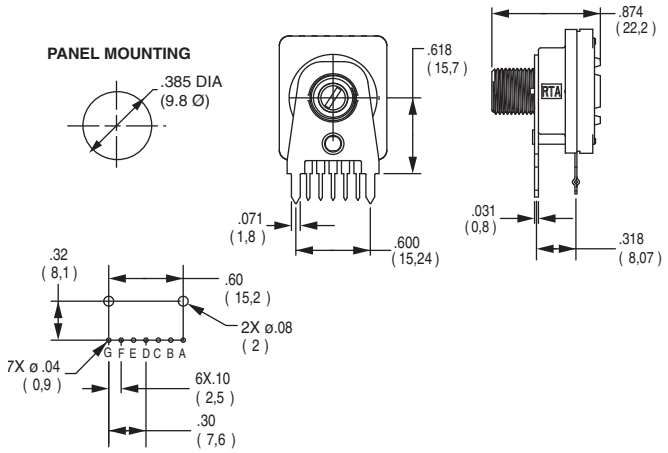

D M10 x .75 METRIC THREADED BUSHING WITH STRAIGHT BRACKET

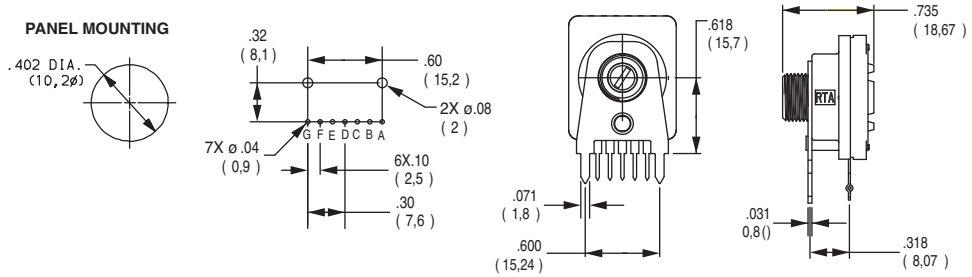

Third Angle Projection

Dimensions are shown: mm
Specifications and dimensions subject to change

ACTUATOR

25N .984 (25,0) WITH SCREWDRIVER SLOT

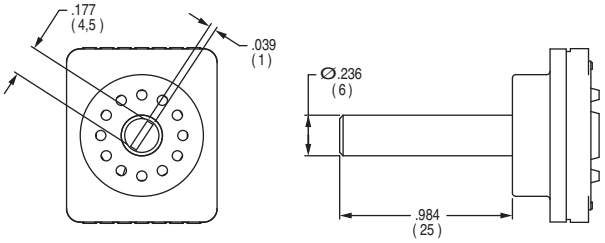

50N 1.97 (50,0) WITH SCREWDRIVER SLOT

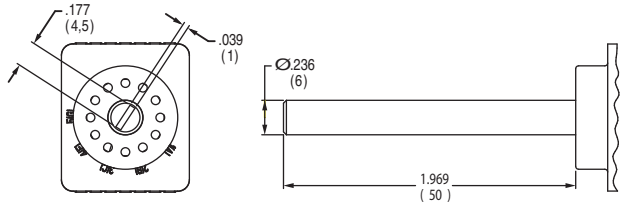

FLS FLUSH SHAFT WITH SCREWDRIVER SLOT AND POSITION INDICATOR

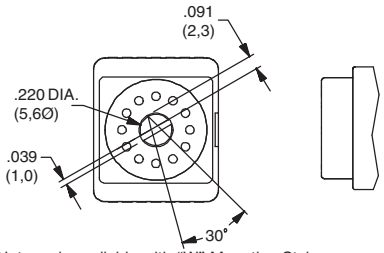

Note: only available with "W" Mounting Style

25F .984 (25,0) SHAFT WITH FLAT

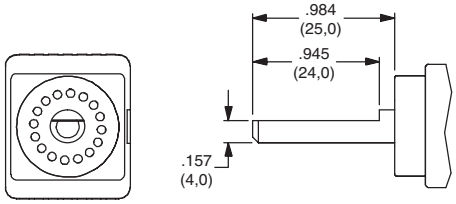

Note: only available with "W" Mounting Style

06F .236 (6,0) SHAFT WITH FLAT

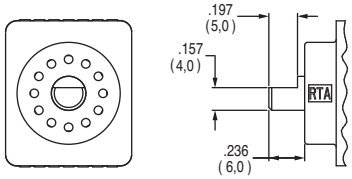

Note: only available with "W" Mounting Style

CONTACT MATERIAL

OPTION CODE	CONTACT AND TERMINAL MATERIAL	RATING	
S	SILVER	LOW LEVEL/DRY CIRCUIT	SWITCH: 150 mA MAXIMUM, 60 V NOMINAL. POWER: 5 VA MAXIMUM. CARRY-5 AMPS MAXIMUM.
P	GOLD	LOW LEVEL/DRY CIRCUIT OR POWER	SWITCH: 20 mA MAXIMUM, 25 V NOMINAL. POWER: 0.5 VA MAXIMUM. CARRY: 1 AMP MAXIMUM.

* Note: See Technical Data section of this catalog for RoHS compliant and compatible definition and specifications.

AVAILABLE HARDWARE

Mounting Nuts

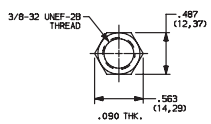

PART NO.
472706201
Standard

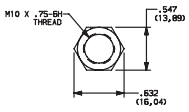

PART NO.
495100201
Metric

Stop pins



PART NO.
Y200300200P

Lockwasher

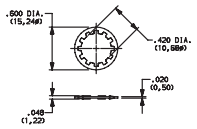

PART NO.
472800202

NOTE: Additional nuts and lockwashers available separately, see section "Technical Data and Additional Hardware".

Third Angle Projection

Dimensions are shown: Inch (mm)
Specifications and dimensions subject to change