211042
OGUL 051 G3-T3
Laser fork light barrier

- Light/dark switching
- IO-Link
- 4 operating modes as an IO-Link parameter
- Diagnostics with IO-Link
- Metal casing
- Electronics integrated
- Sensitivity is adjustable
- High switching frequency
- Bright ring LED
- High protection type



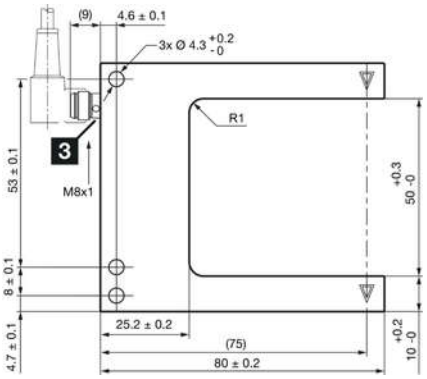

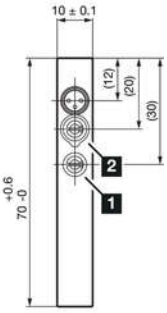

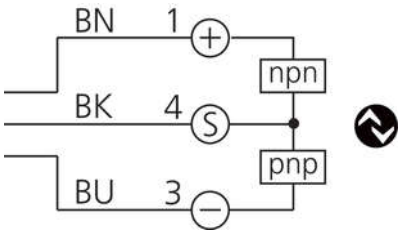

1) Potentiometer
2) NO/ NC
3) LED

BK: black BN: brown BU: blue

Function

IO-Link

Technical data (typ.)	+20°C, 24 V DC
Service voltage	10 … 30 V DC
No-load current (max.)	30 mA
Insulation voltage endurance	500 V
Leg length internal	55 mm
Housing dimensions	70 x 80 x 10 mm
Housing length	80 mm
Housing height	70 mm
Housing width	10 mm
Housing material	Die-cast zinc (Black, powder-coated)
Weight	96 g
Protection class	III, operation on protective low voltage
Approvals	UL
Operating principle	Optical
Evaluation	digital
Design	Fork
Operation modes	STANDARD, HIGH RESOLUTION, POWER, SPEED
Switching output	Push-pull, 100 mA, NO/NC, switchable
Voltage drop (max.)	1 V
Interface	IO-Link (V1.1, COM2 (38.4 kBd) Smart Sensor Profile)
Light source	Laser
Laser class	CLASS 1 LASER PRODUCT, 1 (IEC 60825-1:2014 / EN 60825-1:2014)
Color	Red

211042
OGUL 051 G3-T3
Laser fork light barrier

Technical data (typ.)	+20°C, 24 V DC
Wavelength	655 nm (Pp < 0.3 mW t = 3.4 µs)
Modulation	Clocked
Fork opening	50 mm
Resolution (factory setting)	0.05 mm (STANDARD)
Reproducibility (factory setting)	0.01 mm (STANDARD)
Resolution (STANDARD)	0.05 mm
Reproducibility (STANDARD)	0.01 mm
Resolution (HIGH RESOLUTION)	0.03 mm
Reproducibility (HIGH RESOLUTION)	0.01 mm
Resolution (POWER)	0.1 mm
Reproducibility (POWER)	0.015 mm
Resolution (SPEED)	0.05 mm
Reproducibility (SPEED)	0.015 mm
Sensitivity adjustment	Potentiometer or IO-Link
Switching frequency (factory setting)	5000 Hz (STANDARD)
Switching frequency (STANDARD)	5000 Hz
Switching frequency (HIGH RESOLUTION)	2000 Hz
Switching frequency (POWER)	1000 Hz
Switching frequency (SPEED)	10000 Hz
Ambient temperature during operation	-25 … +60 °C
Protection type	IP 67
Connection	Connector, M8, 3-pin
Connection cable	TK …

More information / accessories	https://www.di-soric.com/211042

© di-soric . Right to change reserved