

Image may differ from product. See technical specification for details.

# 53208

## Single direction thrust ball bearing with sphered housing washer

Single direction thrust ball bearings, with sphered housing washer, can accommodate axial loads in one direction. They must not be subjected to any radial load. Many of the components are interchangeable. The shaft washers have a ground bore that enables an interference fit. The sphered housing washers can accommodate initial misalignment when

configured correctly with a sphered seat washer or a machine component with a sphered surface.

- Separable design facilitates mounting/dismounting and maintenance inspections
- Interchangeable components
- Ground bore of shaft washers enables interference fit
- Sphered housing washers can accommodate initial misalignment

# Overview

## Dimensions

| | |
|---|---|
| Bore diameter | 40 mm |
| Outside diameter | 68 mm |
| Height | 20.3 mm |
| Radius of aligning surface | 56 mm |

## Performance

| | |
|---|---|
| Basic dynamic load rating | 44.2 kN |
| Basic static load rating | 96.5 kN |
| Reference speed | 3 600 r/min |
| Limiting speed | 5 300 r/min |

## Properties

| | |
|---|---|
| Axial load capability | Single-direction |
| Number of rows | 1 |
| Cage | Sheet metal |
| Housing washer type | Sphered |
| Tolerance class | Normal |
| Material, bearing | Bearing steel |
| Coating | Without |

## Logistics

| | |
|---|---|
| Product net weight | 0.27 kg |
| eClass code | 23-05-10-01 |
| UNSPSC code | 31171507 |

## Technical specification

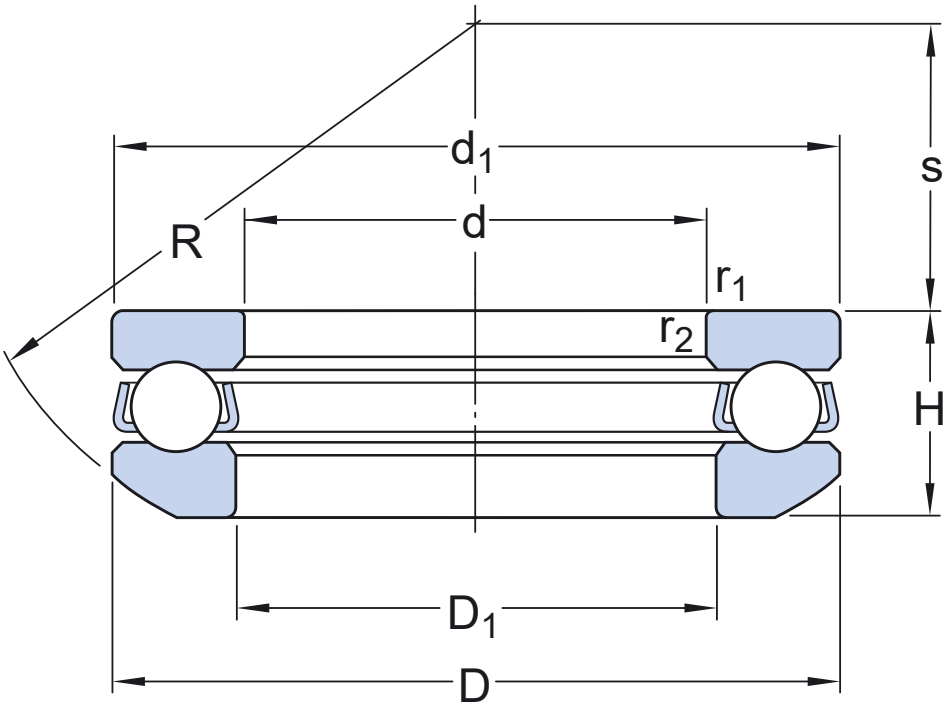


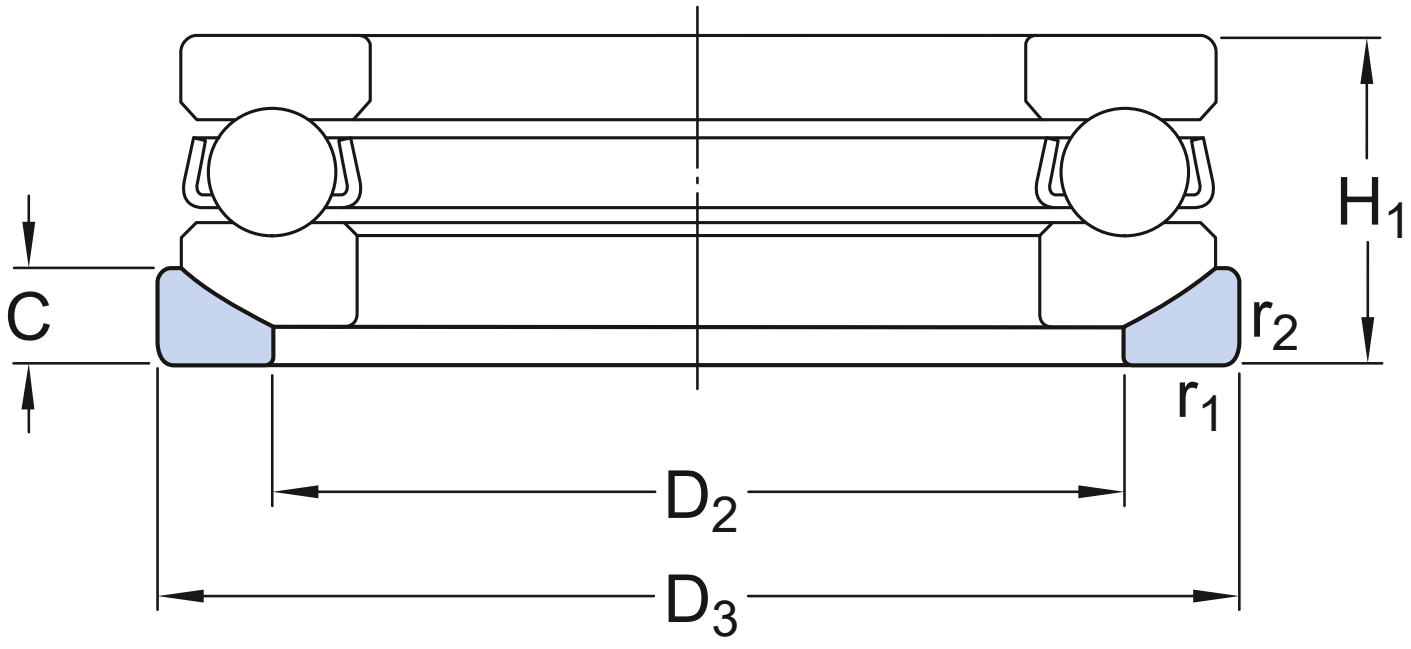


### Dimensions

| | | |
|---|---|---|
| d | 40 mm | Bore diameter |
| D | 68 mm | Outside diameter |
| H | 20.3 mm | Height |

| | | |
|---|---|---|
| $H_1$ | 23 mm | Height bearing including seat washer |
| $d_1$ | ≈ 68 mm | Outside diameter shaft washer |
| $D_1$ | ≈ 42 mm | Inner diameter housing washer |
| $D_2$ | 55 mm | Inner diameter seat washer |
| $D_3$ | 72 mm | Outside diameter seat washer |
| C | 7 mm | Height seat washer |
| R | 56 mm | Radius sphered housing washer |
| s | 28.5 mm | Centre height housing washer sphere |
| $r_{1,2}$ | min. 1 mm | Chamfer dimension washer |

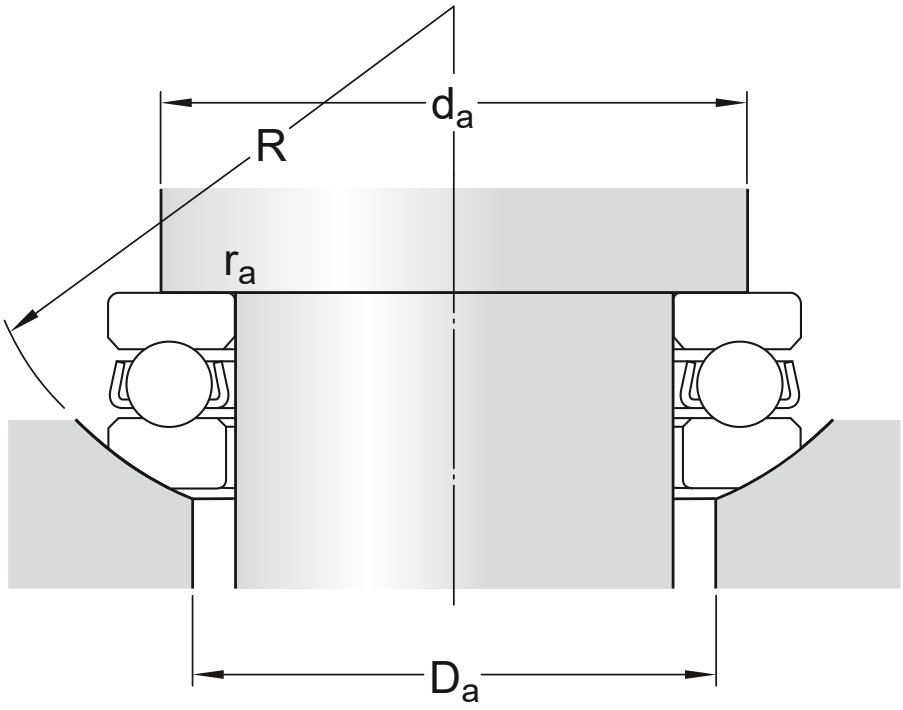




## Abutment dimensions

| | | |
|---|---|---|
| $d_a$ | min. 57 mm | Abutment diameter shaft |
| $D_a$ | max. 55 mm | Abutment diameter housing |
| $r_a$ | max. 1 mm | Fillet radius |

## Calculation data

| | | |
|---|---|---|
| Basic dynamic load rating | C | 44.2 kN |
| Basic static load rating | $C_0$ | 96.5 kN |
| Fatigue load limit | $P_u$ | 3.6 kN |
| Reference speed | | 3 600 r/min |
| Limiting speed | | 5 300 r/min |
| Minimum load factor | A | 0.058 |

## Associated products

| | |
|---|---|
| Seat washer | U 208 |

## Tolerances and clearances

### GENERAL BEARING SPECIFICATIONS

- Tolerances: table 1

## BEARING INTERFACES

- Seat tolerances for standard conditions
- Tolerances and resultant fit

# Compatible products

## Recommended product

| | |
|---|---|
| Sphered seat washer for thrust ball bearings | U 208 |

## More Information

### Product details

- Designs and variants
- General bearing specifications
- Loads
- Temperature limits
- Permissible speed
- Mounting
- Designation system

### Engineering information

- Principles of rolling bearing selection
- General bearing knowledge
- Bearing selection process
- Bearing interfaces
- Seat tolerances for standard conditions
- Lubrication
- External sealing, mounting and dismounting
- Bearing failure and how to prevent it

### Tools

- SKF Product select
- Bearing Frequency Calculator
- SimPro Quick
- LubeSelect for SKF greases
- Heater selection tool

# Terms of use

By accessing and using this website / app owned and published by AB SKF (publ.) (556007-3495 · Gothenburg) (“SKF”), you agree to the following terms and conditions:

### Warranty Disclaimer and Limitation of Liability

Although every care has been taken to assure the accuracy of the information on this website / app, SKF provides this information "AS IS" and DISCLAIMS ALL WARRANTIES, EXPRESS OR IMPLIED, INCLUDING, BUT NOT LIMITED TO, IMPLIED WARRANTIES OF MERCHANTABILITY AND FITNESS FOR A PARTICULAR PURPOSE. You acknowledge that your use of this website / app is at your sole risk, that you assume full responsibility for all costs associated with use of this website / app, and that SKF shall not be liable for any direct, incidental, consequential, or indirect damages of any kind arising out of your access to, or use of the information or software made available on this website / app.

Any warranties and representations in this website / app for SKF products or services that you purchase or use will be subject to the agreed upon terms and conditions in the contract for such product or service.

Further, for non-SKF websites / apps that are referenced in our website / app or where a hyperlink appears, SKF makes no warranties concerning the accuracy or reliability of the information in these websites / apps and assumes no responsibility for material created or published by third parties contained therein. In addition, SKF does not warrant that this website / app or these other linked websites / apps are free from viruses or other harmful elements.

### Third Party Services

When viewing YouTube content via the SKF website(s) (i.e. using YouTube API Services), you agree to be bound by the YouTube Terms of Service.

### Copyright

Copyright in this website / app copyright of the information and software made available on this website / app rest with SKF or its licensors. All rights are reserved. All licensed material will reference the licensor that has granted SKF the right to use the material. The information and software made available on this website / app may not be reproduced, duplicated, copied, transferred, distributed, stored, modified, downloaded or otherwise exploited for any commercial use without the prior written approval of SKF. However, it may be reproduced, stored and downloaded for use by individuals without prior written approval of SKF. Under no circumstances may this information or software be supplied to third parties.

This website /app includes certain images used under license from Shutterstock, Inc.

### Trademarks and Patents

All trademarks, brand names, and corporate logos displayed on the website / app are the property of SKF or its licensors, and may not be used in any way without prior written approval by SKF. All licensed trademarks published on this website / app reference the licensor that has granted SKF the right to use the trademark. Access to this website / app does not grant to the user any license under any patents owned by or licensed to SKF.

### Changes

SKF reserves the right to make changes or additions to this website / app at any time.