EVCA42

Connection cable

VDOAE050MSS0002H05STAE050MSS

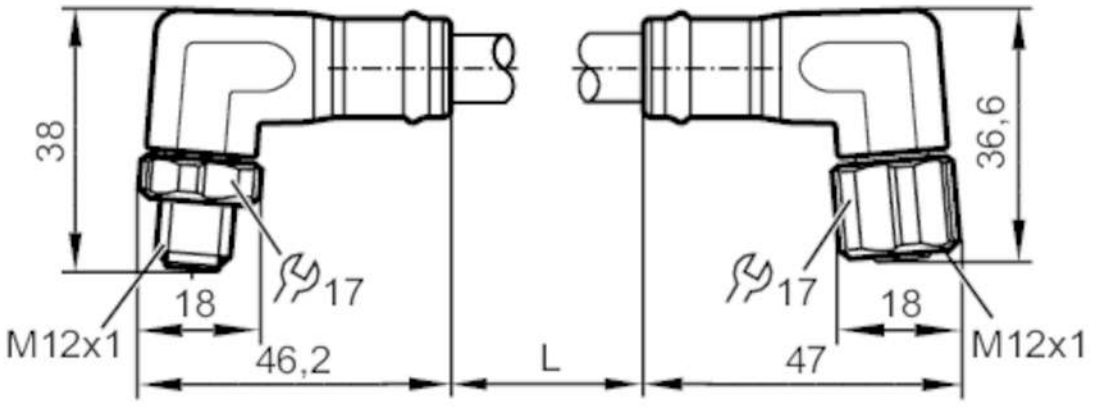

Application		
Special feature		Free from silicone; Halogen-free; Gold-plated contacts; Drag chain suitability
Design		power cable, L-coded
Application		industrial application
Free from silicone		yes
Electrical data		
Operating voltage	[V]	63 DC
Protection class		III
Max. current load total	[A]	16
Operating conditions		
Ambient temperature	[°C]	-25...90
Note on ambient temperature		cULus: ...80 °C
Storage temperature	[°C]	-25...55
Storage humidity	[%]	10...100
Other climatic conditions for storage according to stated class		1K22/ DIN 60721-3-1
Protection		IP 65; IP 67; IP 69K
Mechanical data		
Weight	[g]	451.5
Moulded-body material		TPU
Material nut		brass, nickel-plated
Sealing material		FKM
Drag chain suitability		yes

EVCA42

Connection cable

VDOAE050MSS0002H05STAE050MSS

Drag chain suitability	bending radius for flexible use	min. 10 x cable diameter
	travel speed	max. 3.3 m/s for a horizontal travel length of 5 m and max. acceleration of 5 m/s²
	bending cycles	> 5 Mio.
	torsional strain	± 180 °/m

Remarks

Pack quantity	1 pcs.

Electrical connection - plug

Connector: 1 x M12, angled; coding: L; Moulded body: TPU, orange; Locking: brass, nickel-plated; Contacts: gold-plated; Tightening torque: 0.6...1.2 Nm



Electrical connection - Connection

Cable: 2 m, PUR, Halogen-free, grey, Ø 10.1 mm; 5 x 2.5 mm² (141 x Ø 0.15 mm)

Connection

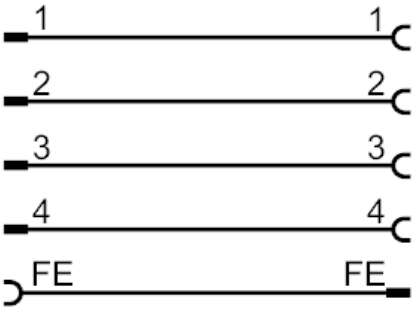

Electrical connection - socket

Connector: 1 x M12, angled; coding: L; Moulded body: TPU, orange; Locking: brass, nickel-plated; Sealing: FKM; Contacts: gold-plated; Tightening torque: 0.6...1.2 Nm

