MURR ELEKTRONIK
stay connected

**Y-Distributor M12 male / MSUD valve plug A-18mm**

PUR 3x0.75 bk UL/CSA+drag ch. 1m

Y connector
Plastic housings with good resistance against chemicals and oils.
Further cable lengths on request.
Male straight – male 90°
M12, 4-pole
A-coded
MSUD
Form A (18 mm)
LED (yellow)
Diode/Z-Diode
Art-No. 7005 - M12 Lite - (plastic hexagonal screw) on request

## Link to Product

**Illustration**

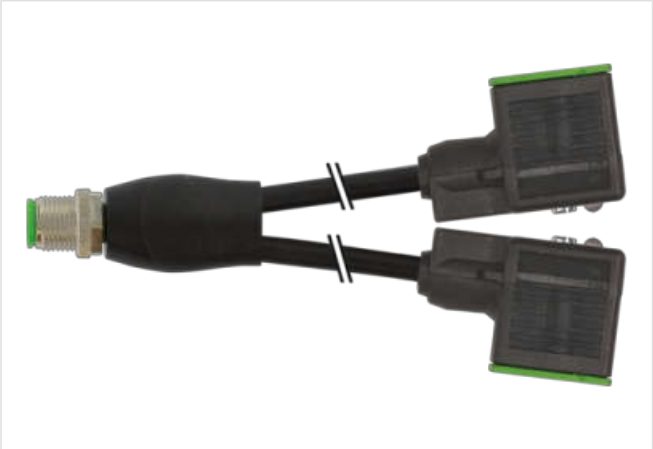

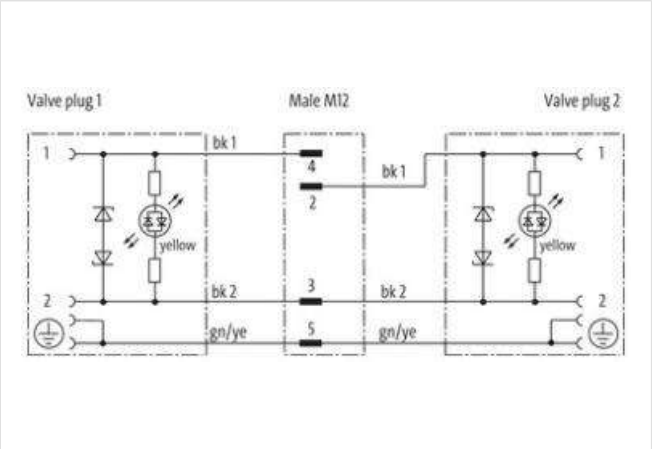


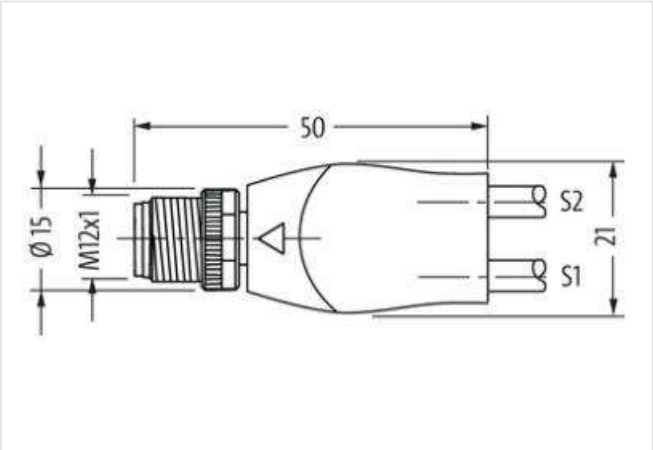


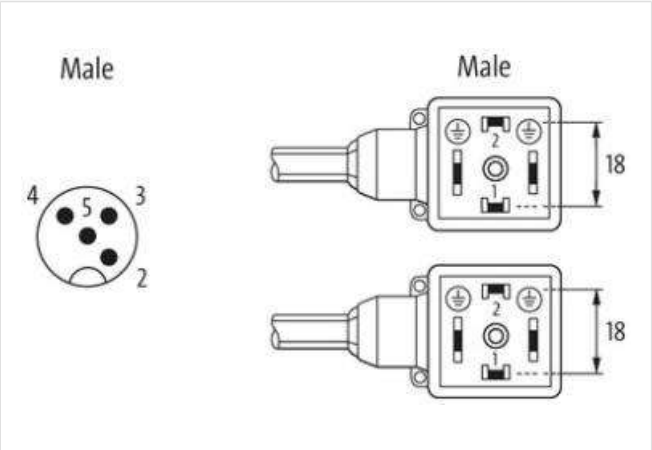


The information in this Product-PDF has been compiled with the utmost care.
Liability for the correctness completeness and topicality of the information is restricted to gross negligence. Version: 2024-01-31

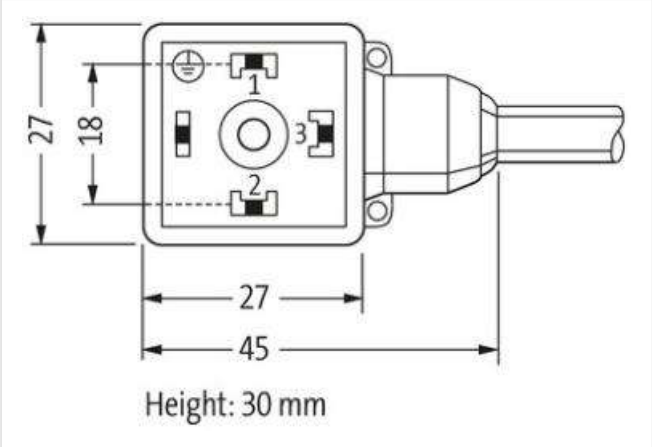


Product may differ from Image

| | |
|---|---|
| Cable length | 1 m |
| **Side 1** | |
| Tightening torque | 0,4 Nm |
| Mounting method | inserted, screwed |
| Coating contact | gold plated |
| Family construction form | M12 |
| Thread | M3 |
| Material contact | Copper alloy |
| Material | PUR |
| No. of poles | 4 |
| Width across flats | SW13 |
| **Side 2** | |
| Tightening torque | 0,6 Nm |
| Mounting method | inserted, screwed |
| Coating contact | silver-plated |
| Family construction form | MSUD |
| Thread | M12 x 1 |
| Material | PBT |
| No. of poles | 4 |
| **Side 3** | |
| Mounting method | inserted, screwed |
| Family construction form | MSUD |
| No. of poles | 4 |
| **Commercial data** | |
| ECLASS-6.0 | 27143423 |
| ECLASS-6.1 | 27279218 |
| ECLASS-7.0 | 27279218 |
| ECLASS-8.0 | 27279218 |
| ECLASS-9.0 | 27060312 |
| ECLASS-10.1 | 27060312 |
| ECLASS-11.1 | 27060312 |
| ECLASS-12.0 | 27060312 |

The information in this Product-PDF has been compiled with the utmost care.
Liability for the correctness completeness and topicality of the information is restricted to gross negligence. Version: 2024-01-31

MURR ELEKTRONIK
stay connected

| | |
|---|---|
| ETIM-5.0 | EC001855 |
| customs tariff number | 85444290 |
| GTIN | 4048879143059 |
| Packaging unit | 1 |
| **Electrical data \| Supply** | |
| Operating voltage AC | 24 V |
| Operating voltage AC min. | 19,2 V |
| Operating voltage AC max. | 28,8 V |
| Operating voltage DC | 24 V |
| Operating voltage DC min. | 18 V |
| Operating voltage DC max. | 30 V |
| Cut-off peak voltage max. | 55 V |
| Current operating per contact max. | 4 A |
| Current consumption max. | 15 mA |
| **Diagnostics** | |
| Status indication LED | yellow |
| **Device protection \| Electrical** | |
| Degree of protection (EN IEC 60529) | IP67 |
| Additional condition protection degree | inserted, screwed |
| Pollution Degree | 3 |
| Rated surge voltage | 0,8 kV |
| Material group (IEC 60664-1) | I |
| Additional suppressor | Diode, Z-Diode |
| **Mechanical data** | |
| Contour for corrugated hose | without |
| **Mechanical data \| Material data** | |
| Coating locking | Nickeled |
| Material gasket | PUR |
| Locking material | Zinc die-casting |
| **Mechanical data \| Mounting data** | |
| Mounting method | inserted, screwed |
| **Environmental characteristics \| Climatic** | |
| Operating temperature min. | -25 °C |
| Operating temperature max. | 85 °C |
| Additional condition temperature range | depending on cable quality |
| **Conformities, approvals** | |
| Product standard | DIN EN 61076-2-101 (M12) |
| **Cable** | |
| Cable identification | 636 |
| Cable Type | 3 (PUR) |
| Approval (cable) | cURus (AWM-Style 20549/10493); CE conform |
| Cable weight [g/m] | 56,1 g |
| Material wire | Cu wire, bare |
| Resistor (core) | max. 26 Ω/km (20 °C) |
| Single wire Ø (core) | 0.15 mm |
| Construction (core) | 42× 0.15 mm (multi-strand wire class 6) |
| Diameter (core) | 3× 0.75 mm² |
| AWG | similar to AWG 18 |
| Material wire isolation | PP |
| Material property wire insulation | CFC-, halogen-, cadmium-, silicone- and lead-free |
| Shore hardness wire isolation | 70 ±5 D |

The information in this Product-PDF has been compiled with the utmost care.
Liability for the correctness completeness and topicality of the information is restricted to gross negligence. Version: 2024-01-31

MURR ELEKTRONIK
stay connected

| | |
|---|---|
| Wire-Ø incl. isolation | 1.85 mm ±5% |
| Color/numbering of wires | bk numbered, gnye longitudinally striped |
| Stranding combination | 3 wires twisted |
| Shield | no |
| Material jacket | PUR |
| Material property (jacket) | CFC-, halogen-, cadmium-, silicone- and lead-free, matt, low-adhesion, machine easy to process, abrasion-resistant, hydrolysis and microbial resistant |
| Shore hardness jacket | 90 ±5 A |
| Outer-Ø (jacket) | 5.9 mm ±5% |
| Color jacket | black |
| chemical resistance | good resistance to oil, gasoline and chemicals (EN 60811-404) |
| thermal resistance | flame-retardant according to UL 1581 Section 1090 (H), CSA FT2 / IEC 60332-2-2 |
| Nominal voltage | 300 V AC |
| Test voltage | 2500 V AC |
| Current load capacity | to DIN VDE 0298-4 |
| Temperature range (fixed) | -40...+80 °C, (+90 °C at max. 10 000 operating hours) |
| Temperature range (mobile) | -25...+80 °C, (+90 °C at max. 10 000 operating hours) |
| Bend radius (fixed) | 5× outer Ø |
| Bend radius (moving) | 10× outer Ø |
| No. of bending cycles (C-track) | max. 10 Mio. (25 °C) |
| Travel speed (C-track) | max. 3 m/s |
| Acceleration (C-track) | max. 10 m/s² |
| Torsion stress | ±180°/m |
| No. of torsion cycles | max. 2 Mio. (25 °C) |
| Torsion speed | 35 cycles/min |

The information in this Product-PDF has been compiled with the utmost care.
Liability for the correctness completeness and topicality of the information is restricted to gross negligence. Version: 2024-01-31