SAFETY INSTRUCTIONS

AF116(B)-40(RT), AF140(B)-40(RT), AF140N4-30
AF(S)116(B)-30(RT), AF140(B)-30(RT), AF(S)146(B)-30(RT)
CAL19-11(RT), CAL19-11B(RT), CEL19-10(RT), CEL19-01(RT)

Contactors/Auxiliary Contacts

Doc.no. 1SFC100003M0201 AC (03/23)



ar	تحذير: جهد كهربائي خطر! راجع تعليمات التشغيل. افصل الكهرباء وقم بتأمينها قبل العمل في هذا الجهاز تنبيه! يجب عدم التركيب إلا من خلال شخص على دراية بمجال التقنية الكهربائية .	it	Attenzione: Tensione pericolosa! Fare riferimento alle istruzioni per l'uso. Prima di intervenire su questo dispositivo, scollegare e isolare tutte le fonti di alimentazione. Attenzione! L'installazione deve essere eseguita esclusivamente da un installatore qualificato.
bg	Предупреждение: Опасно напрежение! Вижте инструкциите за работа. Изключете и блокирайте захранването преди. да работите с устройството. Внимание! Да се монтира само от експерт електротехник.	lt	Įspėjimas: Pavojinga įtampa! Žr. naudojimo instrukcijas. Atjunkite ir laikinai užblokuokite maitinimą prieš dirbdami su šiuo įrenginiu. Dėmesio! Įrengti gali tik asmuo, turintis elektrotechniko patirties.
cs	Varování: Nebezpečné napětí! Viz návod k obsluze. Před zahájením prací na tomto zařízení odpojte a uzamkněte napájení. Pozor! Toto zařízení smí instalovat pouze osoba s elektrotechnickou odborností.	lv	Brīdinājums: Bīstams spriegums! Skatiet darba norādījumus. Pirms sākat darbu ar šo ierīci, atvienojiet un bloķējiet strāvas padevi. Uzmanību! Uzstādīšanu drīkst veikt tikai persona ar zināšanām par elektrotehniku.
da	Advarsel: Farlig elektrisk spænding! Se installationsinstruktioner. Frakobl enheden, og afbryd strømforsyningen, før du arbejder med denne enhed. Giv agt! Installation må kun foretages af personer med elektroteknisk ekspertise.	nl	Waarschuwing: Gevaarlijke spanning! Raadpleeg de installatie-instructies. Koppel dit apparaat los van de stroomvoorziening voordat u werkzaamheden uitvoert. Let op! Installatie mag alleen worden uitgevoerd door een monteur met elektrotechnische expertise.
de	Warnung: Gefährliche Spannung! Siehe Installationsanleitung. Vor dem Arbeiten Gerät ausschalten und von der Spannungsversorgung trennen. Achtung! Installation nur durch elektrotechnische Fachkraft.	no	Advarsel: Farlig spenning! Se i bruksanvisningen. Koble fra og steng av strømmen før du arbeider på denne enheten. Forsiktig! Montering skal kun utføres av kvalifiserte personer med elektrokompetanse.
el	Προειδοποίηση: Επικίνδυνη τάση! Ανατρέξτε στις οδηγίες λειτουργίας. Αποσυνδέστε και απομονώστε την παροχή ισχύος προτού ξε κινήσετε τις εργασίες σε αυτήν τη συσκευή. Προσοχή! Η εγκατάσταση πρέπει να γίνεται μόνο από αδειούχο ηλεκτρολόγο εγκαταστάτη.	pl	Ostrzeżenie: Niebezpieczne napięcie! Patrz: instrukcja instalacji. Przed rozpoczęciem wykonywania pracy z tym urządzeniem odłącz i zablokuj zasilanie. Uwaga! Montaż może wykonywać wyłącznie osoba posiadająca doświadczenie elektrotechniczne.
en	Warning: Hazardous voltage! Refer to installation instructions. Disconnect and lock out power before working on this device. Attention! Installation by person with electrotechnical expertise only.	pt	Aviso: Tensão perigosa! Consulte as instruções de instalação. Desconecte e desligue a energia elétrica antes de trabalhar nesse dispositivo. Atenção! A instalação deve ser feita apenas por uma pessoa com especialidade eletrotécnica.
es	Advertencia: ¡Tensión peligrosa! Consulte las instrucciones de instalación. Antes de trabajar con este dispositivo, desconecte y bloquee la corriente. ¡Atención! La instalación debe ser realizada únicamente por un técnico electricista.	ro	Avertisment: Tensiune electrică periculoasă! Consultați instrucțiunile de utilizare. Deconectați și închideți sursa de energie înainte de a lucra cu acest dispozitiv. Atenție! Instalarea trebuie realizată doar de către o persoană cu expertiză electrotehnică.
et	Hoiatus: Elektrilöögi oht! Lisateavet vaadake kasutusjuhendist. Enne selle seadmega töötamist ühendage lahti ja lukustage toide. Tähelepanu! Seadet tohib paigaldada ainult elektrotehnilise kogemusega isik.	ru	Предупреждение: Опасное электрическое напряжение! Обратитесь к инструкциям по монтажу. Отключите электропитание и обеспечьте безопасность перед началом работ. Внимание! Монтаж должен выполняться только специалистом по электротехническим работам.
fi	Varoitus: Vaarallinen jännite! Katso asennusohje. atkaise virta ja estä virran kytkeminen lukituksella ennen töiden aloittamista. Huomio! Asennuksen saa suorittaa vain henkilö, jolla on kokemusta sähkötekniikasta.	sk	Výstraha: Nebezpečné napätie! Pozrite si návod na použitie. Pred začatím prác na tomto zariadení odpojte a zablokujte napájanie. Pozor! Inštaláciu smie vykonávať len osoba s odbornými znalosťami v oblasti elektrotechniky.
fr	Avertissement: Tension dangereuse! Consultez les consignes d'installation. Débranchez et verrouillez l'alimentation électrique avant d'entreprendre des travaux sur cet appareil. Attention! L'installation doit être effectuée uniquement par une personne ayant une expertise en électrotechnique.	sl	Opozorilo: Nevarna napetost! Glejte navodila za uporabo. Pred delom na tej napravi izklopite in zaklenite električno napajanje. Pozor! Namestitev sme izvesti samo elektrotehnični strokovnjak.
hr	Upozorenje: Opasan napon! Pogledajte upute za ugradnju. Odspojite i isključite struju prije rada na ovom uređaju. Pažnja! Ugradnja je dopuštena samo osobama stručnim u području elektrotehnike.	sv	Varning: Livsfarlig spänning! Se i bruksanvisningen. Frånkoppla och blockera anläggning eller en anläggningsdel innan arbete utförs. Obs! Får endast installeras av behörig elektriker.
hu	Figyelmeztetés: Veszélyes feszültség! Lásd a használati utasítást. Válassza le és zárja ki az áramellátást, mielőtt a berendezésen dolgozni kezd. Figyelem! Az üzembe helyezést csak elektrotechnikai szakértelemmel rendelkező személy végezheti el.	tr	Uyarı: Tehlikeli gerilim! Montaj talimatlarına bakın. Bu cihaz üzerinde çalışmadan önce elektriği kesin ve kilitleyin. Dikkat! Yalnızca elektroteknik uzmanlığa sahip kişiler tarafından kurulabilir.
		zh	警告：高压危险! 请参见操作手册。操作本设备前请断开并锁定电源。注意！安装仅限专业电工人员。

INSTALLATION INSTRUCTIONS

AF116(B)-40(RT), AF140(B)-40(RT), AF140N4-30
AF(S)116(B)-30(RT), AF140(B)-30(RT), AF(S)146(B)-30(RT)
CAL19-11(RT), CAL19-11B(RT), CEL19-10(RT), CEL19-01(RT)

Contactors/Auxiliary Contacts

A1 / A2	M 3,5 1 Nm - 9 lb.in	ø 5,5	Pz 2	1 x 1 ... 4 mm² 2 x 1 ... 4 mm² 1 x AWG 18 ... 14 2 x AWG 18 ... 14	1 x 0,75 ... 2,5 mm² 2 x 0,75 ... 2,5 mm² 1 x AWG 18 .. 14 2 x AWG 18 .. 14	1 x 0,75 ... 2,5 mm² 2 x 0,75 ... 2,5 mm²	1 x 0,75 ... 2,5mm² 2 x 0,75 ... 2,5mm²	I > 3,5 mm L < 8 mm	9 mm
PLC	M 3,5 0.3 Nm - 2.6 lb.in	ø 3,5		1 x 0.2 ... 1.5 mm² 2 x 0.2 ... 1 mm² 1 x AWG 24 ... 12 2 x AWG 24 ... 12	1 x 0,2 ... 2,5 mm² 2 x 0,2 ... 1,5 mm² 1 x AWG 24 ... 12 2 x AWG 24 ... 12	1 x 0,25 ... 2,5 mm² 2 x 0,25 ... 1 mm²	1 x 0,25 ... 2,5 mm² 2 x 0,5 ... 1,5 mm²		6 mm

To be installed in environmental conditions pollution degree 3 or lower.

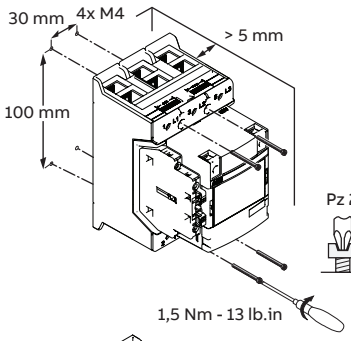

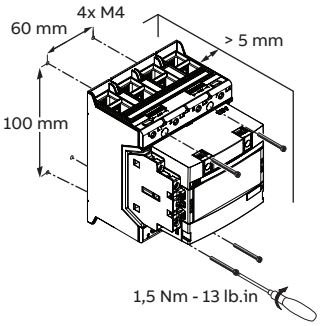

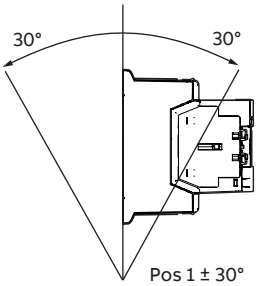

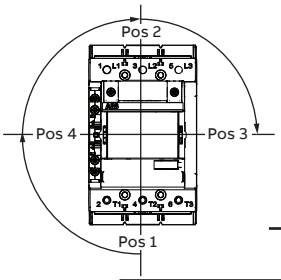

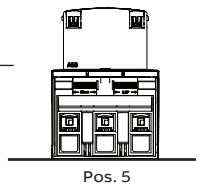

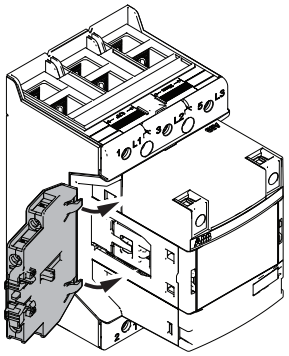

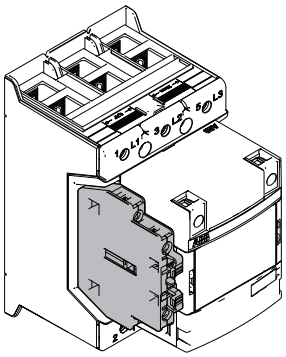

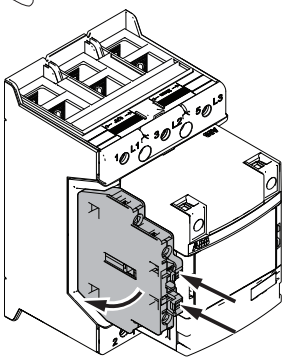

AF(S)116(B)-30(RT), AF140(B)-30(RT), AF(S)146(B)-30(RT)

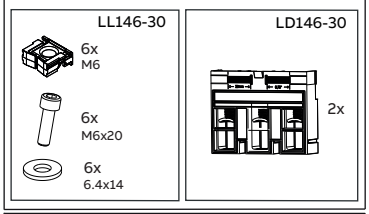

AF116(B)-40(RT), AF140(B)-40(RT)

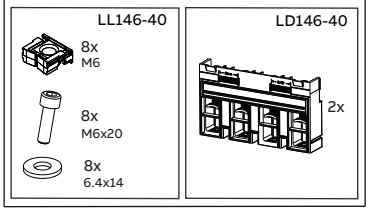

According to UL 60947-4-1:
Use wire Cu 75°C only. Use built-in cable clamps or use Listed (ZMVV) Wire Connectors and Soldering Lugs. Wire connectors (Cable pole-shoe) crimped with special factory crimp tool. Enclosure with min. dimension 24 by 20 by 10 inches should be used.

AF(S)116-30, AF(S)140-30, AF(S)146-30: Suitable for use on a circuit capable of delivering not more than the max. symmetrical amperes at the max. voltage, **shown in SOC.**

Only use wires of the same dimension when you connect 2 wires to each terminal.

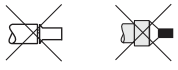

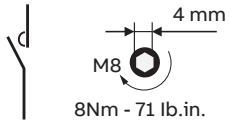

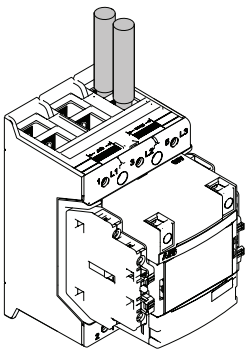

20 mm/0,78”

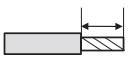

Stranded

1 x 10...95 mm²
2 x 10...95 mm²
1 x AWG 6...4/0
2 x AWG 6...4/0



Flexible

1 x 10...70 mm²
2 x 10...70 mm²

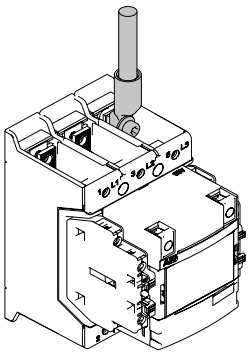





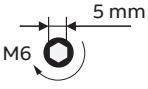

9 Nm - 80 lb.in.

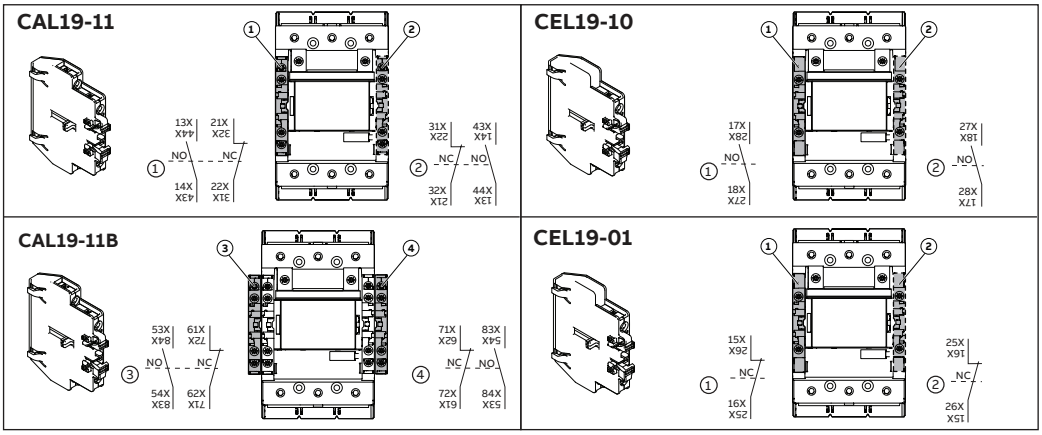

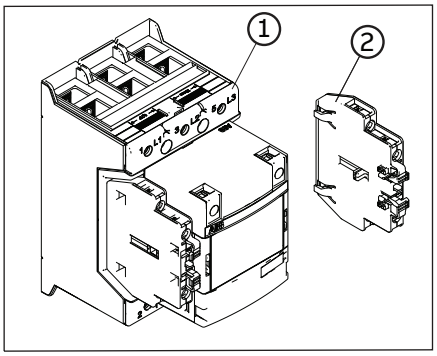

CAL19 Pilot duty acc. to UL508

Rating code	Therminal Continuous Current	Voltage	Make/Break Current
A 600	10A	120V AC 240V AC 480V AC 600V AC	60 A / 6 A 30 A / 3 A 15 A / 1.5 A 12 A / 1.2 A
Q 300	2.5A	125V DC 250V DC	0.55 A 0.27 A

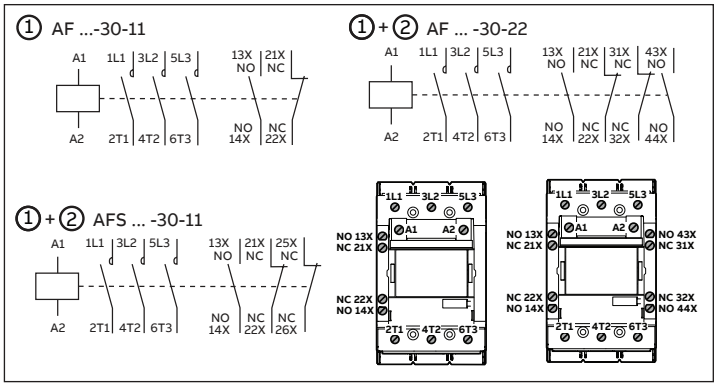

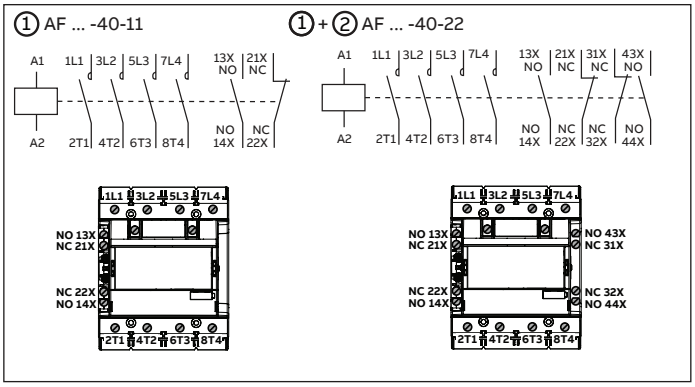

Notice.	This product has been designed for environment A. Use of this product in environment B may cause unwanted electromagnetic disturbances in which case the user may be required to take adequate mitigation measures.
Hinweise.	Dies ist ein Produkt für Umgebund A. In Haushaltsumgebung kann dieses Gerät unerwünschte Funkstörungen verursachen; in diesem Fall kann der Anwender verpflichtet sein, angemessenne Maßnahmen durchzuführen.
Notice.	Ce produit a été conçu pour environnement A. L'utilisation de ce produit dans environnement B peut causer de perturbations électro-magnétiques non désirées qui, dans ce cas, peuvent obliger l'utilisateur à prendre des mesures d'atténuation appropriées.
Obs.	Den här produkten har konstruerats för miljöklass A. Användning av produkten i miljöklass B kan förorsaka oönskade elektomagnetiska störningar och i så fall krävs att användaren vidtar nödvändiga åtgärder.
Avvertenza.	Questo prodotto è stato progettato per l'ambiente A. L'uso di questo prodotto nell'ambiente B può provocare disturbi elettromagnetici indesiderati, nel qual caso l'utilizzatore può dover prendere adeguate misure per loro attenuazione.
Nota.	Este producto ha sido diseñado para ambientes A. El uso de este producto en ambientes B puede causar perturbaciones electromag-néticas no deseadas, en tal caso usuario tendrá que tomar las medidas de mitigación adecuadas.
警告！	本产品适用于环境 A，　在环境 B 中使用本产品会产生有害电磁干扰，　在此情况下用户需采取适当防护措施.
Замечание.	Устройство разработано для применения в средах категории A. Применение в средах категории B может привести к возникно вению нежелательных электромагнитных помех. В этом случае могут потребоваться дополнительные меры защиты от помех.

Definite Purpose magnetic motor controller. Breaking all lines. Max 600V AC, 50/60 Hz:

TYPE	Herm. ref. comp, AC-8a		Ballast, AC-5a/ Resistance air heating	Elevator duty
	FLA	LRA		
AF(S)116	116	800	160	54
AF140	125	875	200	54
AF(S)146	160	1050	200	54

General
AF-contactors are fitted with an electronic interface.

Code-11...-14, optimized for wide voltage range and stability
Operation is done, as with conventional contactors, by applying and removing supply votlage on A1 and A2. Closing when 80% above the lower nominal voltage limit, opening when below 55% of the lower nominal voltage limit, which is indicated in the functional diagram.

Code-42 and -43, optimized for short operation times
Operation is done, as with conventional contactors, by applying and removing supply voltage on A1 and A2. Closing when 80% above the lower nominal voltage limit, opening when below 20% of the upper nominal voltage limit. Undefined function between the limits.

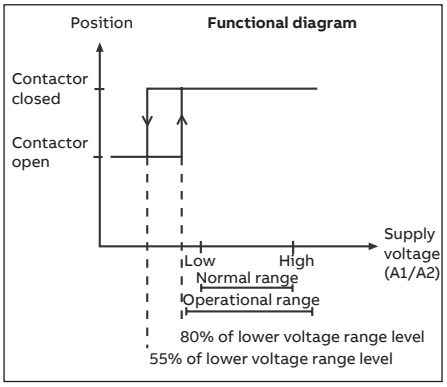

Code-31...-34 built-in PLC interface
Operation is controlled by separate logic control signals from for instance a PLC. Use of logic control requires a steady supply voltage on A1 and A2 within the rated voltage range, as described for code-11...-14- The function of the logic control signal will no longer be guaranteed when the supply voltage on A1 and A2 is removed.
The logic control signals are operated with 24V d.c. There are two control signals (ON and OFF_N) and a common reference (COM). For the control signals, the function is guaranteed from 15V d.c. (6mA) to 33V d.c. (20mA).
The contactor is closed by a control signal ON and opened by removal of control signal from OFF_N. The functions are described in the diagram below. “1” means 24V d.c. between the control signal and COM. “0” means no voltage between the control signal and COM. Minimum control signal pulse length for opening and closing is 10ms. To connect the PLC interface use cable dimension of max 1.5mm²

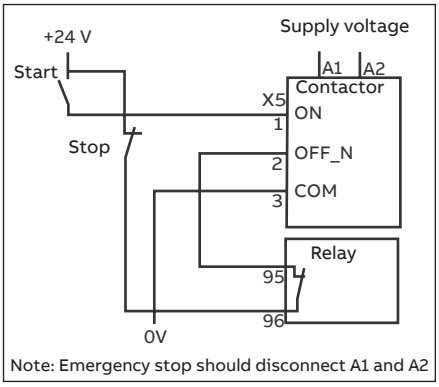

Note: Emergency stop should disconnect A1 and A2

When used with switches the wiring can be done according to diagram above.

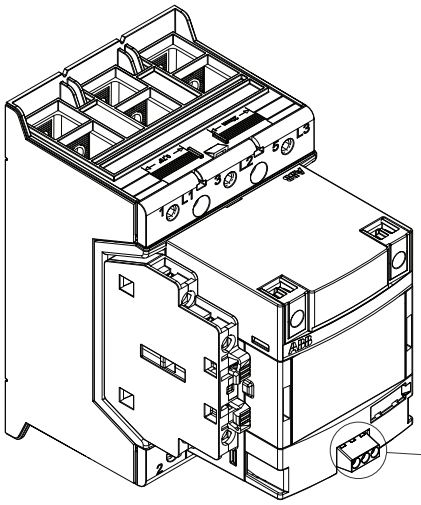

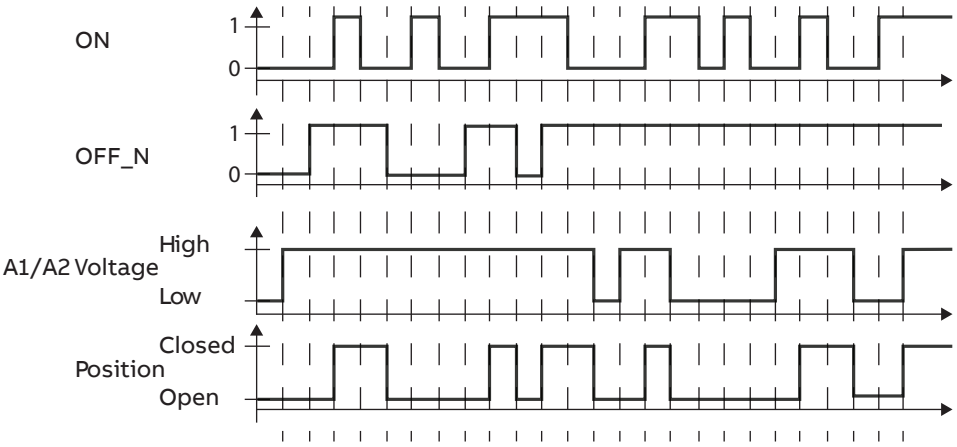

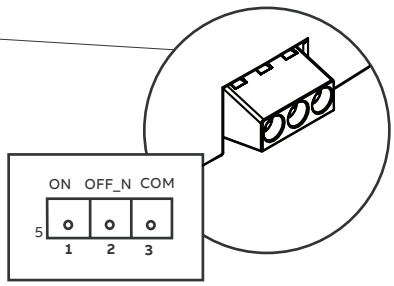

ABB Electrification Sweden AB
SE-721 61 Västerås
Sweden

Further information:

abb.com/lowvoltage

Revision
AC

Revision date
2023-03-01

Document number
1SFC100003M0201

© Copyright 2023 ABB.
All rights reserved.
Specifications subject to change without notice.