TECHNICAL DATASHEET

Absolute Motorfeedback Series AD 35



- Shortes absolute encoder world wide
- Mounting depth: 23.65 mm
- Hub shaft 8 mm
- Resolution up to 22 Bit Singleturn
- +120°C operating temperature
- 10,000 rpm continous operation
- BiSS or SSI interface
- BiSS or SSI interface
- Bandwidth 500kHz
- Bandwidth 500 kHz

GENERAL INFORMATION

Hengstler presents the shortest hollowshaft encoder world wide: The AD35. It is available with a 8 mm hub shaft and and a resolution up to 22 Bit Singleturn. The mechanical design consists of two ball bearings and a flexible torque support. The AD35 complements the ACURO-DRIVE series and is appropriate for use within BLDC servo motors with small frame sizes.

Further fields of Application:

- Medical
- Measuring instrument
- Military
- Robotics

Fully digital control loop

The new and completely digital OptoAsic technology enables the transition to a truly digital drive system. The conventional absolute encoders still have analog sine wave signals for the feedback of speed and position data. The AD35, however, provides fully digital position data up to 22 Bit over the BiSS interface with a variable clock rate up to 10 MHz. BiSS is the only open high speed bidirectional sensor interface available on the market. Backward compatibility to most of the existing drives is realized through the variant with SSI interface together with 2048 sine –cosine periods per revolution.

Integrated diagnostic system

The AD35 has an integrated diagnostic system that controls and regulates the internal signals. Maximum motor uptime is achieved through the pre warning in case of any system error or aging effects well before they affect the function of the encoder. A code plausibility check guarantees that the output data represents always the true position. Also the operating temperature can be measured and read out with 8 Bit resolution. If programmable limits are exceeded or under run this is indicated over warn and alarm bits.

TECHNICAL DATA
mechanical

Housing diameter	37.5 mm
Shaft diameter	8 mm (Hubshaft)
Flange (Mounting of housing)	Tether
Protection class shaft input (EN 60529)	IP40
Protection class housing (EN 60529)	IP40
Axial endplay of mounting shaft (hubshaft)	± 0.5 mm

TECHNICAL DATASHEET

Absolute Motorfeedback Series AD 35

TECHNICAL DATA
mechanical (continued)

Radial runout of mating shaft (hubshaft)	± 0.05 mm
Max. speed	max. 10 000 rpm (continuous), max. 12 000 rpm (short term)
Starting torque	≤ 1 Ncm
Moment of inertia	ca. 2.5 x 10^{-6} kgm²
Vibration resistance (DIN EN 60068-2-6)	100 m/s² (10 ... 2000 Hz)
Shock resistance (DIN EN 60068-2-27)	1000 m/s² (6 ms)
Operating temperature	-15 °C ... +120 °C
Storage temperature [1]	-15 °C ... +85 °C
Material housing	Plastic
Weight	approx. 80 g (ST)
Connection	Cable, radial PCB connector, 12 pole

[1] due to packing

TECHNICAL DATA
electrical

Supply voltage	DC 5 V -5 %/+10 % or DC 7 - 30 V
Max. current w/o load	50 mA
Resolution singleturn	12 - 22 Bit
Resolution multiturn	12 Bit
Output code	Gray
Drives	Clock and Data / RS422
Incremental signals optional	Sinus-Cosinus 1 Vpp
Number of pulses	2048
3dB limiting frequency	500 kHz
Absolute accuracy	±35"
Repeatability	±10"
Alarm output	Alarm bit (SSI Option), warning and alarm bit (BiSS)

ELECTRICAL CONNECTIONS
PCB connector, 12 pole

Color	PIN	Signals
grey	1a	$\overline{\text{Data}}$
white/ green	2a	A+
red/ blue	3a	0 V sensor
green	4a	B+
green	5a	$\overline{\text{Clock}}$
white	1b	DC 5 V
yellow	2b	Clock
grey/ pink	3b	B-
brown	4b	0 V (U_N)
brown/ green	5b	A-
pink	6b	Data

TECHNICAL DATASHEET

Absolute Motorfeedback Series AD 35

CONNECTION ENCODER SIDE

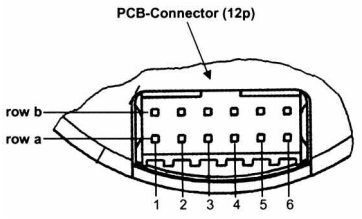

12 pin PCB connector
manufacture Berg, type Minitek

DIMENSIONED DRAWINGS

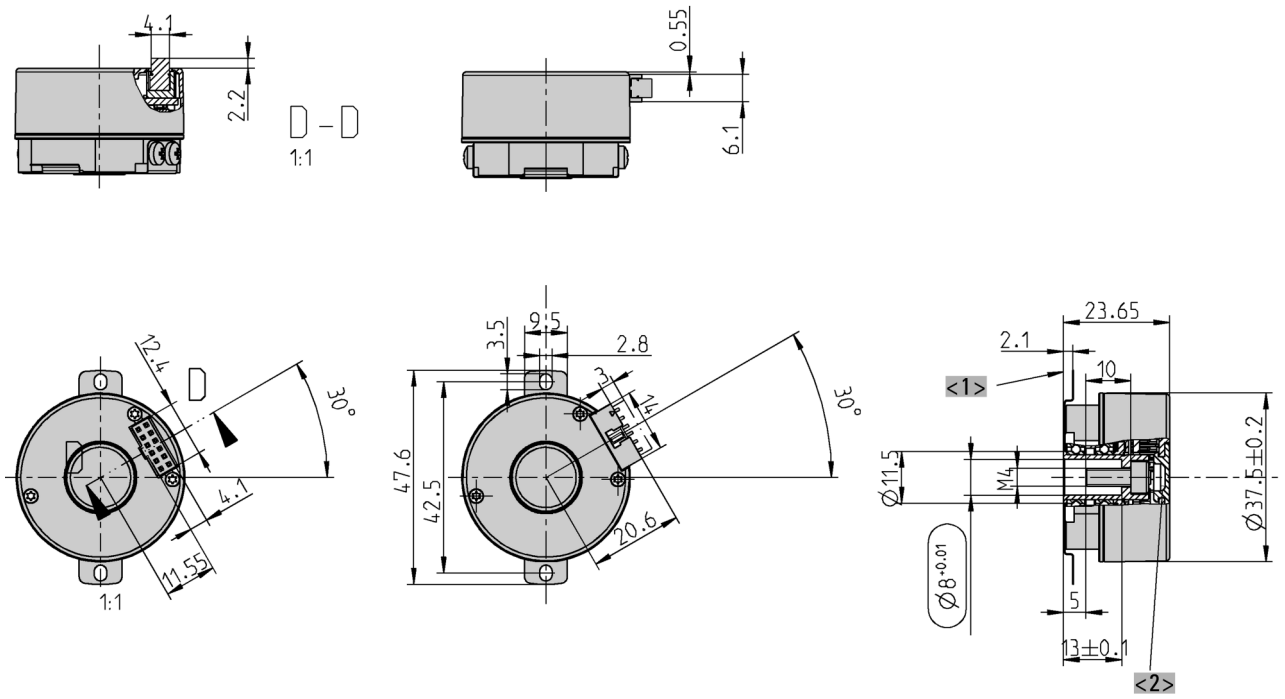

<1> Basis shaft
<2> Screw DIN EN ISO 4762, mounting torque 2 Nm

Dimensions in mm

ORDERING INFORMATION

Type	Resolution	Supply voltage [1]	Flange, Protection, Shaft	Interface	Connection
☐	☐	☐	☐	☐	☐
AD35	**0012** 12 Bit ST **0013** 13 Bit ST **0014** 14 Bit ST **0017** 17 Bit ST **0019** 19 Bit ST (BiSS) **0022** 22 Bit ST (BiSS)	**A** DC 5 V **E** DC 7 - 30 V	**F.0R** Spring tether, IP40, 8 mm hub shaft	**BI** BiSS **SG** SSI Gray **SC** SSI Gray (+SinCos 1Vpp)	**0** PCB connector, axial, 12 pole **2** PCB connector, radial, 12 pole **A** PCB connector, axial, 12 pole with mating connector and 0.5 m cable **B** PCB connector, radial, 12 pole, with mating connector and 0.5 m cable

[1] No inverse-polarity protection for 5 V power supply