E12435

Connection cable

VDOGH042SCS0030T04STGH040SCS

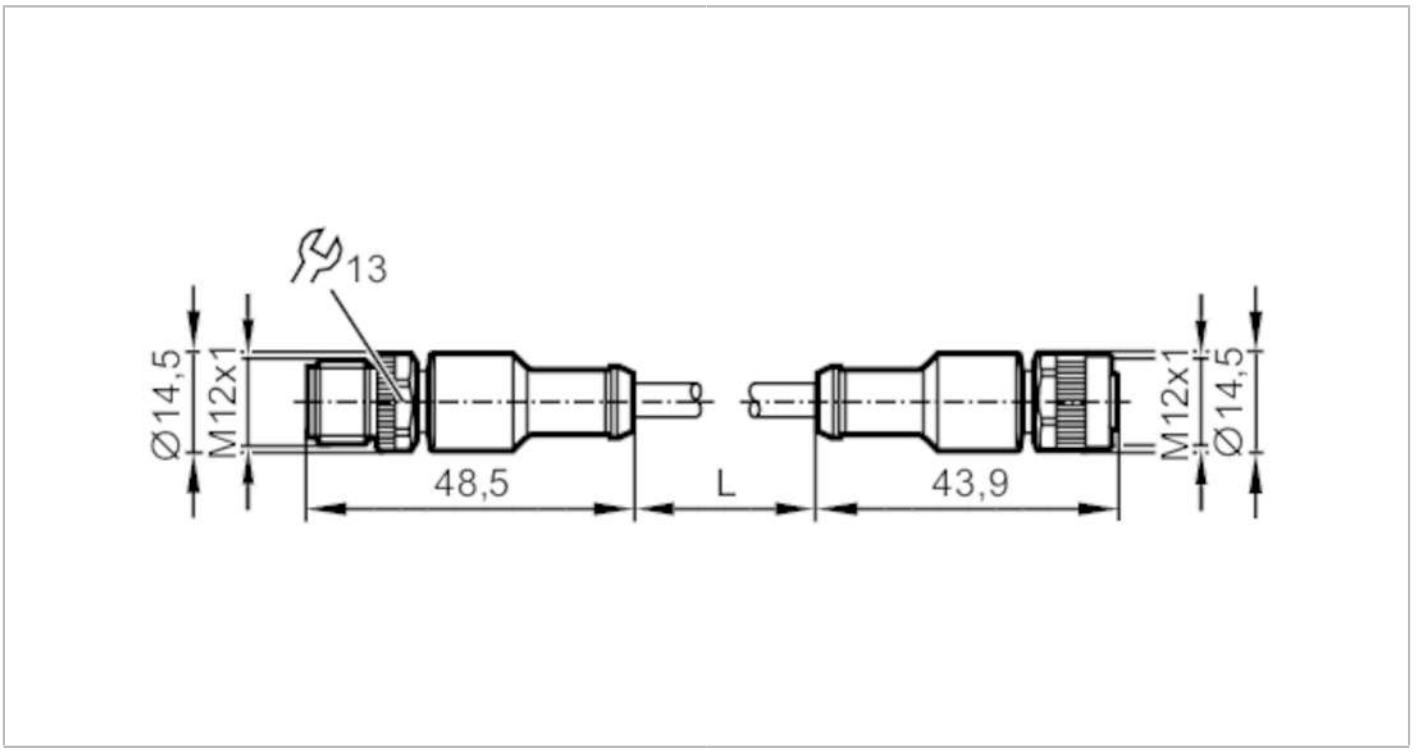

Application		
Special feature		Free from silicone; Gold-plated contacts
Application		welding applications
Free from silicone		yes
Electrical data		
Operating voltage	[V]	10...36 DC
Protection class		II
Max. current load total	[A]	4
Outputs		
Electrical design		PNP
Operating conditions		
Ambient temperature	[°C]	-25...85
Ambient temperature (moving)	[°C]	-25...85
Protection		IP 68
Mechanical data		
Weight	[g]	816.2
Dimensions	[mm]	14.5 x 14.5 x 48.5
Moulded-body material		PUR
Material nut		diecast zinc
Sealing material		FKM

E12435

Connection cable

VDOGH042SCS0030T04STGH040SCS

Displays / operating elements		
Display	switching status	1 x LED, yellow
	operation	1 x LED, green

Remarks	
Remarks	with 2 label holders 30 mm long
Pack quantity	1 pcs.

Electrical connection - plug

Connector: 1 x M12, straight; coding: A; Moulded body: PUR; Locking: diecast zinc; Contacts: gold-plated; Tightening torque: 0.6...1.5 Nm



Electrical connection

Cable: 30 m, PUR, black, Ø 4.9 mm; not irradiated (can be recycled); resistant to welding sparks; 4 x 0.34 mm² (42 x Ø 0.1 mm)

Connection

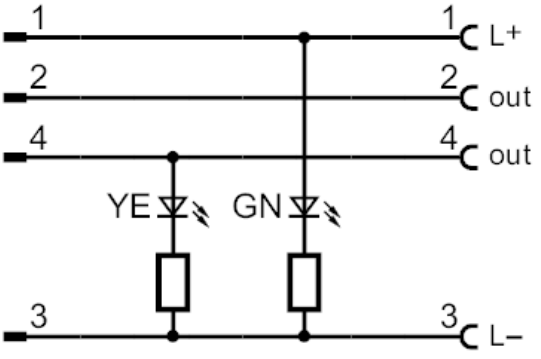

Electrical connection - socket

Connector: 1 x M12, straight; coding: A; Moulded body: PUR, transparent; Locking: diecast zinc; Sealing: FKM; Contacts: gold-plated; Tightening torque: 0.6...1.5 Nm

