E70142

Wirable socket

SDOGL070PLSFKPG

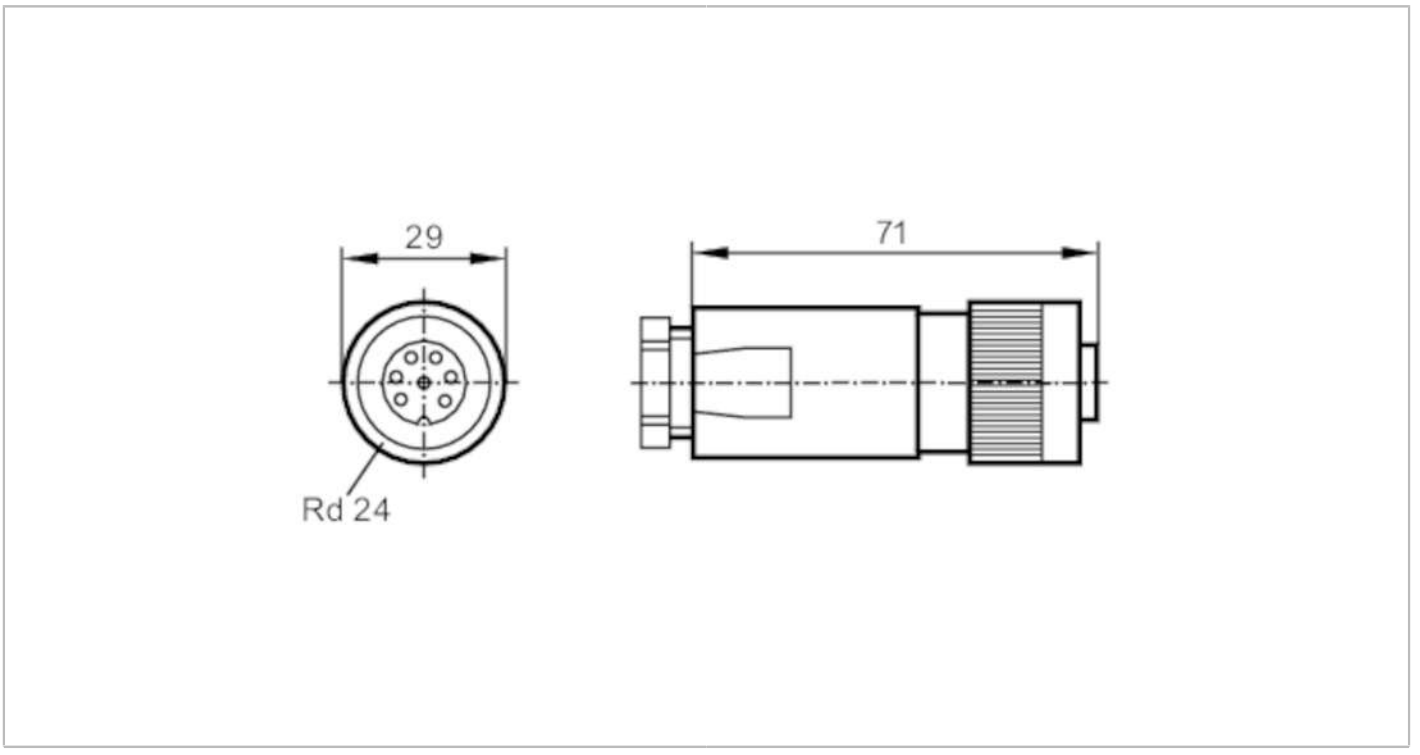

Application		
Special feature		Gold-plated contacts
Electrical data		
Operating voltage	[V]	< 45 AC / < 70 DC
Operating conditions		
Ambient temperature	[°C]	-40...100
Protection		IP 67
Mechanical data		
Weight	[g]	49.4
Dimensions	[mm]	29 x 29 x 71
Materials		PBT
Moulded-body material		PBT
Material nut		PBT
Remarks		
Pack quantity		1 pcs.

E70142

Wirable socket

SDOGL070PLSFKPG

Electrical connection

terminals: ...2.5 mm²; Cable sheath: Ø 10...12 mm

Electrical connection - socket

Connector: 1 x Rd24, straight; coding: A; Moulded body: PBT; Locking: PBT; Contacts: gold-plated



Connection

