Shock-Safe Fuseholder, 5 x 20 mm, Slotted Cap/Fingergrip, Snap stepless, 1.0 - 3.0 mm, IEC 60335-1





Fingergrip

250 VAC · 2.5 W / 10 A (VDE) · 400 VAC · 16 A (UL/CSA)

Description

- Meets the new requirements of IEC 60335-1 for appliances in unattended use (clause 30.2.3). This includes the enhanced requirements of glow wire tests acc. to IEC 60695-2-12 and -13. Order numbers: xxxx.xxxx.15
- Panel Thickness 1.0 - 3.0 mm, Snap stepless
- Fuseholder available in black, grey and white

Standards

- IEC 60127-6
- UL 4248-1 / UL 512
- CSA C22.2 no. 39

Approvals

- VDE Certificate Number: 127216
- UL File Number: E39328
- CSA File Number: 38456

Applications

- Industrial electronic
- Household appliances
- Medical equipment

Weblinks

pdf-datasheet, html-datasheet, General Product Information, Approvals, CE declaration of conformity, RoHS, CHINA-RoHS, REACH, e-Shop, SCHURTER-Stock-Check, Distributor-Stock-Check, Detailed request for product

Technical Data

Shock-Safe Category	PC2
Fuse-Link	5 x 20 mm
Mounting	Panel Mount, Front Side
Mounting	Snap-in
Terminal	Solder or Quick-Connect 4.8 x 0.5 mm
Rated Voltage	250 VAC , 400 VAC (UL/CSA)
Rated current	10 A (VDE), 16 A (UL/CSA)
Rated Power Acceptance IEC	2.5 W / 10 A @ Ta 23 °C 2.5 W / 10 A for xxxx.xxxx.15 versions in horizontal position
Degree of Protection	IP 40
Protection Class	Suitable for appliances with protection class I or II acc. to IEC 61140
Admissible Ambient Air Temp.	-40 °C to 85 °C
Climatic Category	40/085/21 acc. to IEC 60068-1
Material: Socket	Thermoplastic, black, UL 94V-0
Material: Terminals	Tin-Plated Copper Alloy
Unit Weight	5.3 g
Storage Conditions	0 °C to 60 °C, max. 70% r.h.
Product Marking	SCHURTER, Type, Rated voltage, Power Acc./ Current Rating, Panel Thickness, Approvals

Soldering Methods	Iron
Solderability	350 °C / 2 sec acc. to IEC 60068-2-20, Test Ta, method 2
Resistance to Soldering Heat	350 °C / 10 sec acc. to IEC 60068-2-20, Test Tb, method 2
Contact Resistance	< 5 mΩ at 20 mV
Dielectric Strength	> 3 kV > 4 kV between L/N-PE (50 Hz; 1 min)
Impulse Withstand Voltage	> 2.5 kV between L-N > 6 kV between L/N-PE
Insulation Resistance	> 10 MΩ between L-N > 100 MΩ between L/N-PE (500 VDC; 1 min)
Overvoltage Category	I - II acc. to IEC 60664-1
Pollution Degree	1 - 3 acc. to IEC 60664-1
Resistance to Vibration	acc. to IEC 60068-2-6, test Fc
Panel Thickness s	1.0 - 3.0 mm

Dimension

40 mm

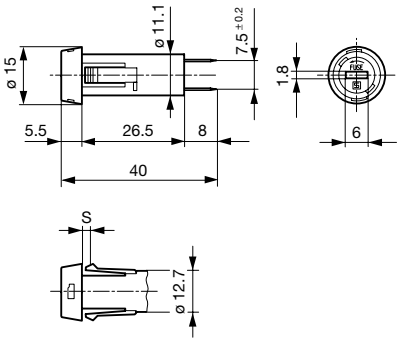

Variants 3101.0030, 3101.0230, 3101.0031 and 3101.0331
s = Panel thickness (see variants)

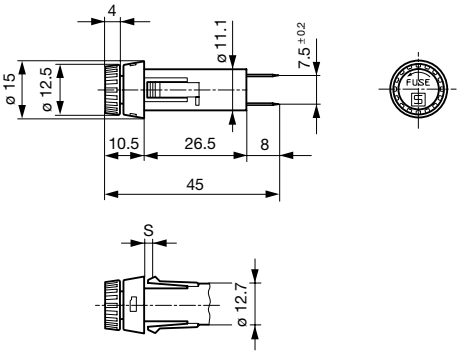

Variants Fingergrip 3101.0035, 3101.0235, 3101.0036 and 3101.0336
s = Panel thickness (see variants)

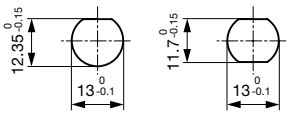

Mounting holes

Derating Curves

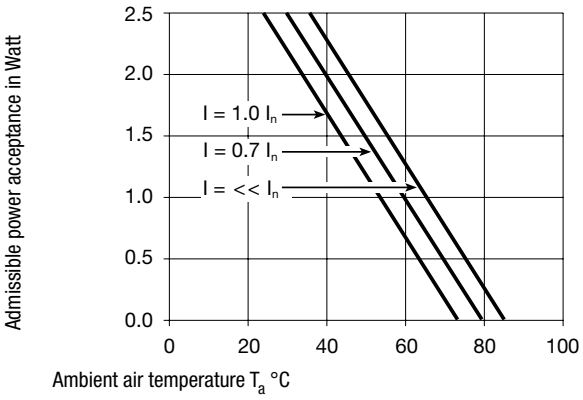

All Variants

Holder	Cap	Panel Thickness s [mm]	Terminal	Colour Holder	Material	Order Number
●	slotted	1.0 - 1.8mm	Solder	black	Thermoplastic	3101.0030
●	slotted	1.0 - 1.8mm	Solder	black	Spec. Thermoplastic 1	3101.0030.15
●	slotted	1.0 - 1.8mm	Quick-Connect 4.8 x 0.5 mm	black	Thermoplastic	3101.0230
●	slotted	1.0 - 1.8mm	Quick-Connect 4.8 x 0.5 mm	black	Spec. Thermoplastic 1	3101.0230.15
●	slotted	2.0 - 3.0mm	Solder	black	Thermoplastic	3101.0031
●	slotted	2.0 - 3.0mm	Solder	black	Spec. Thermoplastic 1	3101.0031.15
●	slotted	2.0 - 3.0mm	Quick-Connect 4.8 x 0.5 mm	black	Thermoplastic	3101.0331
●	slotted	2.0 - 3.0mm	Quick-Connect 4.8 x 0.5 mm	black	Spec. Thermoplastic 1	3101.0331.15
●	Fingergrip	1.0 - 1.8mm	Solder	black	Thermoplastic	3101.0035
●	Fingergrip	1.0 - 1.8mm	Solder	black	Spec. Thermoplastic 1	3101.0035.15
●	Fingergrip	1.0 - 1.8mm	Quick-Connect 4.8 x 0.5 mm	black	Thermoplastic	3101.0235
●	Fingergrip	1.0 - 1.8mm	Quick-Connect 4.8 x 0.5 mm	black	Spec. Thermoplastic 1	3101.0235.15

Holder	Cap	Panel Thickness s [mm]	Terminal	Colour Holder	Material	Order Number
●	Fingergrip	2.0 - 3.0mm	Solder	black	Thermoplastic	3101.0036
●	Fingergrip	2.0 - 3.0mm	Solder	black	Spec. Thermoplastic 1	3101.0036.15
●	Fingergrip	2.0 - 3.0mm	Quick-Connect 4.8 x 0.5 mm	black	Thermoplastic	3101.0336
●	Fingergrip	2.0 - 3.0mm	Quick-Connect 4.8 x 0.5 mm	black	Spec. Thermoplastic 1	3101.0336.15

Most Popular.

Availability for all products can be searched real-time:http://www.schurter.com/en/Stock-Check/Stock-Check-SCHURTER

Spec. thermoplastic meets the new requirements of IEC 60335-1 for appliances in unattended use (clause 30.2.3). This standard includes the enhanced requirements of glow wire tests acc. to IEC 60695-2-12 and -13.

White and grey colours available on request

Packaging Unit Bulk 186 x 91 x 91 mm (100 pcs.)

28.04.2015

The specifications, descriptions and illustrations indicated in this document are based on current information. All content is subject to modifications and amendments. Information furnished is believed to be accurate and reliable. However, users should independently evaluate the suitability and test each product selected for their own applications.