Accessories
List

1949 Keating Cross Rd
Saanichton, B.C.
Canada V8M 2A4

Phone: (250) 544-2207
Fax: (250) 544-2279
www.suregripcontrols.com

SURE GRIP™ CONTROLS INC.

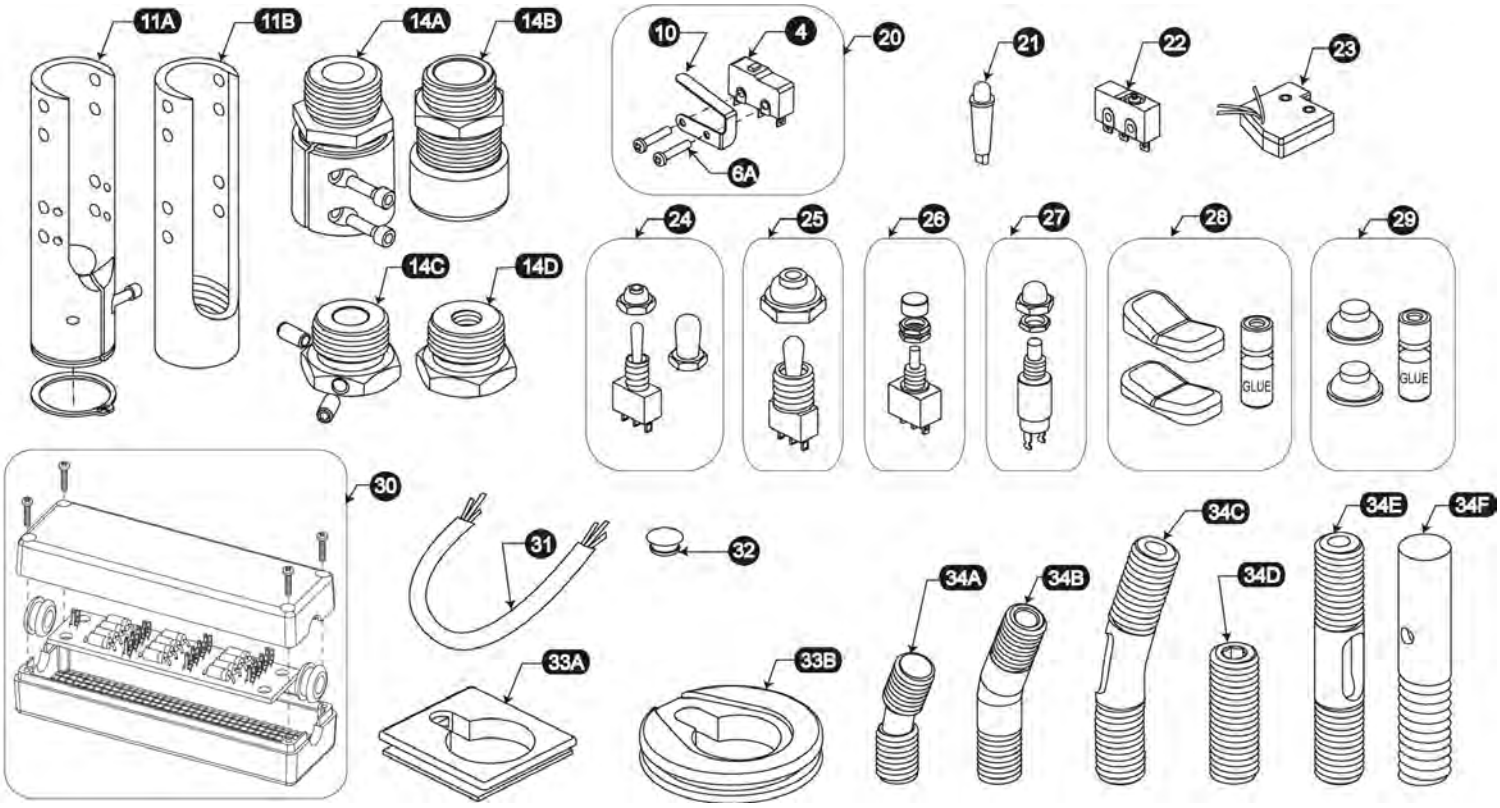

FLG	PART#	DESCRIPTION	FLG	PART#	DESCRIPTION
4	SW-00	Handle Switch, L/S	25	TO-2MA-L	Toggle 2 Pos Main, SPDT Large Bat
6A	SC-03	2 x 7/16" Tapping Screw - Pan Head		TO-3MA-A	Toggle: 3 Pos Main SPDT C/W Boot
10	LS-00	Leaf Spring for Trigger		TO-3MA-L	Toggle: 3 Pos Main, SPDT Large Bat
11A	PN-05-385-A	Mounting pin, Clamping C/W .385" Bore		TO-3MA,MO-A	Toggle: 3 Pos Main/mom SPDT C/W Boot
11B	PN-03	Mounting Pin "L/S"	26	PB-1MO	Pushbutton Switch/Cap - Momentary
14A	BU-03C-	Mounting Adapter: 12 mm Clamping	27	PB-2MA-A	Pushbutton Switch - Maintained C/W Boot
	BU-04C-A	Mounting Adapter: 14 mm Clamping	28	RK-02	Rocker Kit
14B	SR-01	Strain Relief: SS Bushing Adapter	29	FB-VV-A	Flex Button Repair Kit: 2 VV/V2 Modules
14C	BU-01S-A	Adapter Bushing - 10mm, Set Screws	30	DP-03	Diode Pack Assy. 3 Functions
14D	BU-00	Adapter Bushing - 1/4" Hole		DP-12	Diode Pack Assy. 12 Functions
	BU-01	Adapter Bushing - 10mm x 1.5	31	WR-07	7 Cond. Wire, 20 Guage/Foot
	BU-02	Adapter Bushing - 12mm x 1.25		WR-09	9 Cond. Wire, 20 Guage/Foot
	BU-03	Adapter Bushing - 12mm x 1.75		WR-13	13 Cond. Wire, 22 Guage/Foot
	BU-04	Adapter Bushing - 14mm x 2		WR-12S	12 Cond. Wire, 24 Guage Shielded
	BU-05	Adapter Bushing - 5/8" NC		WR-15	15 Cond. Wire, 22 Guage/Foot
	BU-06	Adapter Bushing - 14mm x 1.5	32	HP-01	3/8" Hole Plug
	BU-07	Adapter Bushing - 3/8" NC	33A	AD-01	Joystick Boot Adapter: 1.125" Square Hole
	BU-08	Adapter Bushing - 1/2" NC	33B	AD-02	Boot Adapter: 1 1/2" Round Opening
	BU-09	Adapter Bushing - 9/16" NC	34A	ST-07	12mm x 1.75 x 40mm, Bent Stud
	BU-10	Adapter Bushing - 12 x 1.5mm	34B	ST-05	12mm x 1.75 x 70mm Drilled, Bent Stud
20	SK-01	Leaf Spring and Switch Kit	34C	ST-06	5/8"NC - 14mm x 85mm Wire Exit, Bent Stud
21	LED-24G	LED Green 24 Volt - Resistor:1/4"	34D	ST-02	14mm x 2.0 x 40mm Straight Stud
22	SW-00S	Handle Switch, L/S Sealed	34E	ST-04	9/16" x 75mm Wire Exit, Straight Stud
	SW-00SG	Handle Switch, L/S Sealed Gold	34F	ST-08-125	J Handle Stud: 12mm x 1.25
23	PC-V2	Variable Voltage Module 1-4 VDC		ST-08-175	J Handle Stud: 12mm x 1.75
24	TO-2MA-A	Toggle: 2 Pos Main SPDT C/W Boot		ST-08-14x2	J Handle Stud: 14mm x 2