Product Catalogue



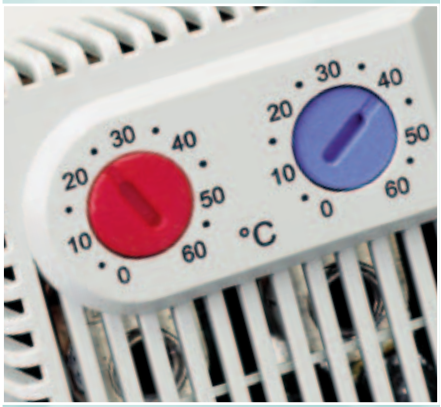





STEGO

Thermal Management Products & Accessories from STEGO
successfully used worldwide

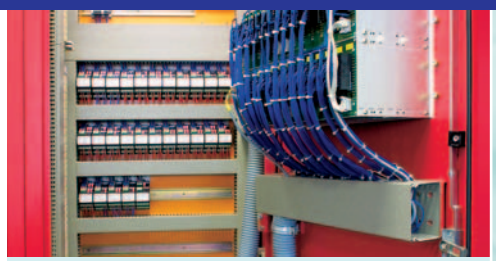

for control panels and enclosures



for traffic control and monitoring systems in the transport industry



for high voltage switchgear in outdoor and indoor substations



system protection in the automotive industry



in transmitter stations of cellular phone networks



for motor control centres and control cabinets

Problem

Condensation forms due to fluctuating temperature, even in sealed enclosures. In combination with dust and aggressive gases condensation causes corrosion which results in stray currents and arcing. Too high a temperature or too low a temperature, can also lead to serious component failure. The safety risk is enormous and the cost of the operational delays as a consequence is incalculable.

Solution

Only constant optimum climatic conditions allow components to function properly. The right climate can be attained by a temperature and moisture control system. When temperatures are too low or when temperature differences (e.g., night/day) are large heating is required. It may also be necessary to keep components cool by controlled ventilation.

Applications

Whether for telecommunications or traffic systems, power stations or outdoor plants, ATMs or parking control systems, where electronics have to be protected against humidity, heat or cold, STEGO's comprehensive product range offers effective economical solutions.

Our Products

Conventional and PTC semiconductor control panel heaters and fan-assisted heaters ranging from 5W to 1200W, as well as tropicalised and EX variations. Temperature and humidity controls ranging from 0 to 60°C (32 to 140°F) and 35% to 100% RH. A new filter fan series in EMC and standard versions with excellent performance and shielding characteristics. Panel lighting and accessories.

About Us

We have been developing and producing innovative products for thermal management for more than twenty-five years. Our products are renowned for their reliability and long life, simplicity of use and high quality. Used and proven worldwide even under extreme conditions. STEGO is ISO 9001:2000 certified and has branches in ten countries.

Content

Heating	
Small semiconductor Heater RCE 016 Series	4
Small semiconductor Heater RC 016 Series	5
Small semiconductor Heater HGK 047 Series	6
Small semiconductor Heater CSK 060 Series	7
Semiconductor Heater HG 140 Series	8
Hazardous area Heater CREx 020 Series	9
Semiconductor Heater CS 060 Series	10
Semiconductor Heater CSF 060 Series	11
Small semiconductor Fan Heater CS 028 Series	12
Space-saving Fan Heater HV 031 / HVL 031 Series	13
Compact Fan Heater Series HGL 046	14
Semiconductor Fan Heater CR 027	15
Fan Heater with integrated thermostat or hygrostat CR 030	16
Fan Heater with integrated thermostat or hygrostat CR 130	17
Fan Heater with integrated thermostat or hygrostat CS 030	18
Fan Heater with integrated thermostat or hygrostat CS 130	19
Ventilating	
Low maintenance Filter Fan FF 018 Series (21m³/h to 102m³/h)	20 + 21
Low maintenance Filter Fan FF 018 Series (200m³/h)	22
High-performance Filter Fan FF 018 Series (300m³/h)	23
High-performance Filter Fan FF 018 Series (550m³/h)	24
Outdoor Filter Fan FF 018 Series	25
Low noise Roof Filter Fan RFF 018 Series	26
High-performance 19" Fan Tray LE 019 Series	27
Regulating and Monitoring	
Airflow Monitor LC 013 / LCF 013 for higher reliability	28
Electronic Relay SM 010 (DC 24V + DC 48V)	29
Small, compact Thermostat KTO 011 / KTS 011	30
Fix Thermostat FTO 011 / FTS 011	31
Dual Thermostat ZR 011	32
Dual Thermostat FTD 011	33
Mechanical Thermostat FZK 011	34
Electronic Thermostat ET 011 (DC 24V)	35
Mechanical Hygrostat MFR 012	36
Electronic Hygrostat EFR 012	37
Electronic Hygrotherm ETF 012	38
Hazardous area Thermostat REx 011 Series	39
Lighting	
Slimline Lamp with on/off switch SL 025 Series	40
Slimline Lamp with movement sensor SL 025 Series	41
Dual Lamp with on/off switch DL 026 Series	42
Dual Lamp with movement sensor DL 026 Series	43
Hand Lamp with lamp holder DL 026 Series	44
Compact Lamp KL 025 Series	45
Accessories	
Electrical Socket SD 035 Series	46
Pressure compensation Device DA 084	47
Pressure compensation Device DA 284	48
Pressure compensation Device DA 284 (stainless steel)	49
Self-adhesive appliance holder STEGOFIX	50
Calculation of temperature control in enclosures	51

Indication of measurements in mm. Errors and omissions excepted. Specifications are subject to change without notice. Suitability of the products for their intended use and any associated risks must be determined by the end customer/buyer in their final application. Up-to-date versions of all technical data sheets in pdf-format can be found in the Internet at www.stego.de, www.stego.co.uk or www.stegonorden.se for download.

Small semiconductor Heater RCE 016 Series 5W, 9W



- **Temperature limiting**
- **Wide voltage range**
- **Dynamic heating up**
- **Energy saving**
- **Compact**

Small heaters designed to prevent condensation and to ensure a minimum operating temperature in small enclosures.

Technical Data

Operating voltage	120-240V AC/DC* (min. 110V, max. 265V)
Heating element	PTC resistor, self regulating and temperature limiting
Heater body	aluminium
Mounting	see Accessories
Fitting position	variable
Dimensions	length 45mm, Ø 10mm
Operating / Storage temperature	-45 to +70°C (-49 to +158°F)
Protection type / Protection class	IP32 / II (double insulated)
Approvals	VDE + UL File No. E150057
Accessories	mounting clips (see illustration), Art. No. 09008.0-01
Note	other voltages on request

*Operating with voltages below 140V AC/DC reduces heating performance by approx. 10%.

Example of connection

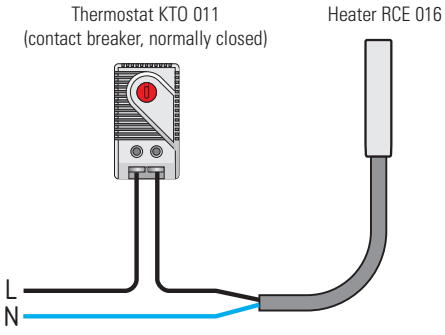

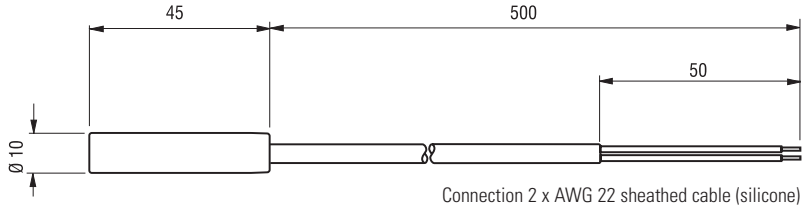

Connection 2 x AWG 22 sheathed cable (silicone)

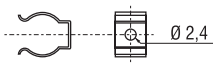

Mounting clips Art. No. 09008.0-01 (1 packing unit = 2 pieces)

Art. No.	Heating capacity*	Inrush current max.	Surface temperature (approx.)	Connection	Weight (approx.)
01622.0-00	5W	2.0A	165°C	2 x AWG 22 sheathed cable (silicone)	20g
01623.0-00	9W	2.5A	175°C	2 x AWG 22 sheathed cable (silicone)	20g

*at 20°C (68°F) ambient temperature

Small semiconductor Heater RC 016 Series 8W, 10W, 13W



- **Temperature limiting**
- **Wide voltage range**
- **Dynamic heating up**
- **Energy saving**
- **Compact**

These small heaters are designed to prevent condensation and to ensure a minimum operating temperature in small enclosures.

Technical Data

Operating voltage	120-240V AC/DC* (min. 110V, max. 265V)
Heating element	PTC resistor, self regulating and temperature limiting
Heater body	aluminium, anodised
Mounting	screw fixing
Fitting position	variable
Operating / Storage temperature	-45 to +70°C (-49 to +158°F)
Protection type / Protection class	IP32 / II (double insulated)
Approvals	VDE + UL File No. E150057
Note	other voltages on request

*Operating with voltages below 140V AC/DC reduces heating performance by approx. 10%.

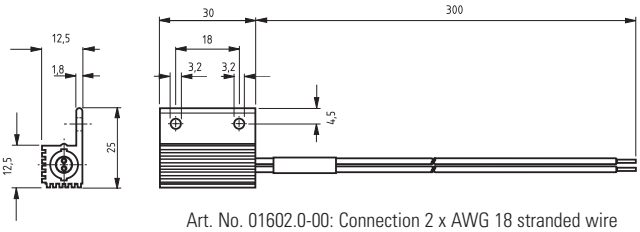

Art. No. 01602.0-00: Connection 2 x AWG 18 stranded wire

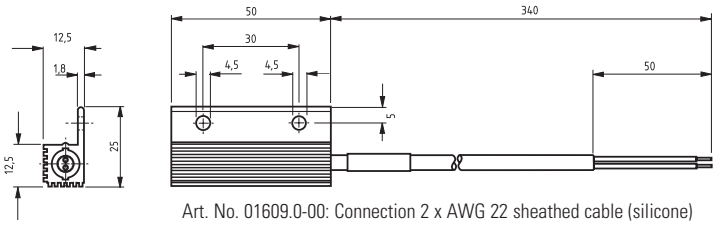

Art. No. 01609.0-00: Connection 2 x AWG 22 sheathed cable (silicone)

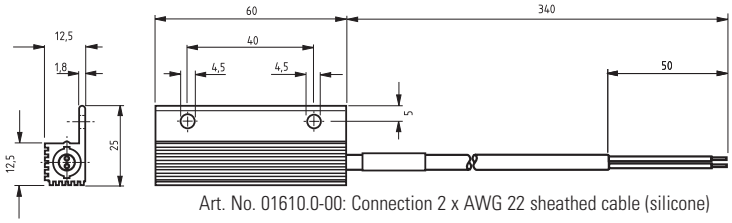

Art. No. 01610.0-00: Connection 2 x AWG 22 sheathed cable (silicone)

Example of connection

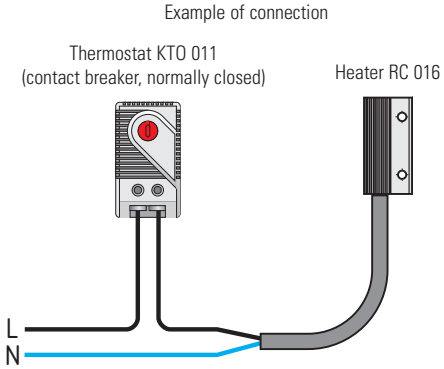

Art. No.	Heating capacity*	Inrush current max.	Surface temperature (approx.)	Connection	Weight (approx.)
01602.0-00	8W	2.0A	150°C	2 x AWG 18 stranded wire	20g
01609.0-00	10W	2.5A	155°C	2 x AWG 22 sheathed cable (silicone)	30g
01610.0-00	13W	3.0A	170°C	2 x AWG 22 sheathed cable (silicone)	40g

*at 20°C (68°F) ambient temperature

Small semiconductor Heater HGK 047 Series 10W to 30W



- **Dynamic heating up**
- **Energy saving**
- **Wide voltage range**
- **Temperature limiting**
- **Clip fixing**

The heaters are used in enclosures where condensation is to be prevented or the temperature may not fall below a minimum value. In this way corrosion is avoided and an even temperature is ensured.

CE RoHS 2002/95/EC compliant

Technical Data

Heating element	PTC resistor, self regulating and temperature limiting
Heater body	extruded aluminium profile, anodised
Mounting	clip for 35mm DIN rail, EN 50022
Fitting position	vertical
Operating / Storage temperature	-45 to +70°C (-49 to +158°F)
Protection type / Protection class	IP54 / I (earthed)
Accessories	screw fixing, Art. No. 09024.0-00 (1 packing unit = 2 pieces)

Example of connection

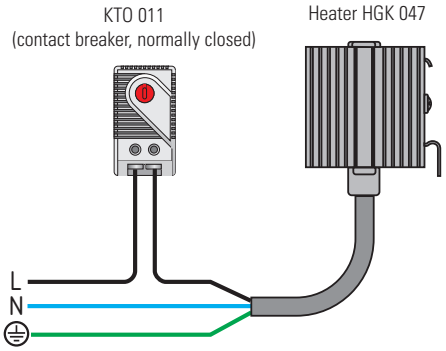

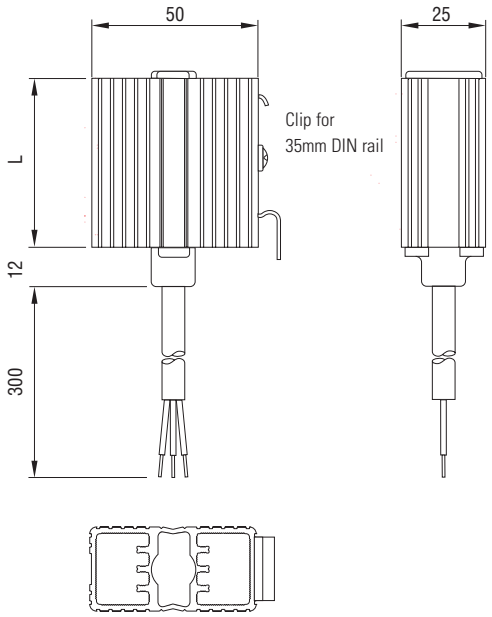

Art. No.	Operating voltage	Heating capacity[1]	Inrush current max.	Length (L)	Weight (approx.)	Connection	Approvals
04700.0-00	120-240V AC/DC[2]	10W	1.0A	50mm	0.10kg	3 x 0.5mm² x 300mm sheathed cable (silicone)	VDE
04701.0-00	120-240V AC/DC[2]	20W	2.5A	60mm	0.20kg	3 x 0.5mm² x 300mm sheathed cable (silicone)	VDE
04702.0-00	120-240V AC/DC[2]	30W	3.0A	70mm	0.20kg	3 x 0.5mm² x 300mm sheathed cable (silicone)	VDE
04700.9-00	110-120V AC/DC	10W	1.0A	50mm	0.10kg	3 x AWG 20 x 300mm sheathed cable	UL File No. E150057
04701.9-00	110-120V AC/DC	20W	1.5A	70mm	0.20kg	3 x AWG 20 x 300mm sheathed cable	UL File No. E150057
04702.9-00	110-120V AC/DC	30W	1.5A	100mm	0.20kg	3 x AWG 20 x 300mm sheathed cable	UL File No. E150057

[1] at 20°C (68°F) ambient temperature
[2] (min. 110V, max 265V) Operating with voltages below 140V AC/DC reduces heating performance by approx. 10%.

Touch-Safe Small Heater CSK 060 Series (Semiconductor) 10W, 20W



- Low surface temperature
- Double insulated (plastic housing)
- Wide voltage range
- Temperature limiting
- Dynamic heating up
- Clip fixing

The heaters are used in enclosures where condensation is to be prevented or the temperature may not fall below a minimum value. In this way corrosion is avoided and an even temperature is ensured. The heaters are designed for permanent operation.

Technical Data

Operating voltage	120 - 240V AC/DC* (min. 110V, max. 265V)
Heating element	PTC resistor - temperature limiting
Surface temperature	< 85°C (185°F) (according to VDE 0100),
	except upper protective grille
Connection	2-pole terminal 2.5mm², torque 0.8Nm max.
Casing	plastic according to UL94 V-0, black
Dimensions	98 x 38 x 75mm
Mounting	clip for 35mm DIN rail, EN 50022
Fitting position	vertical
Operating/ Storage temperature	-45°C to +70°C (-49°F to +158°F)
Protection type / Protection class	IP20 / II (double insulated)
Approvals	VDE + UL File No. E150057 (according to UL499
	in combination with UL508A)
Note	other voltages on request

*Operating with voltages below 140V AC/DC reduces heating performance by approx. 10%.

Example of connection

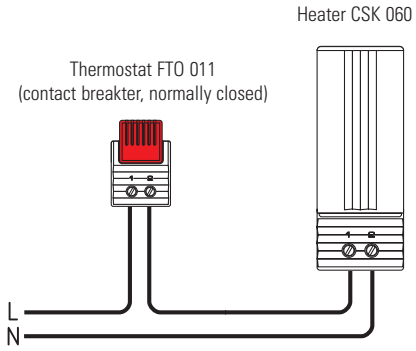

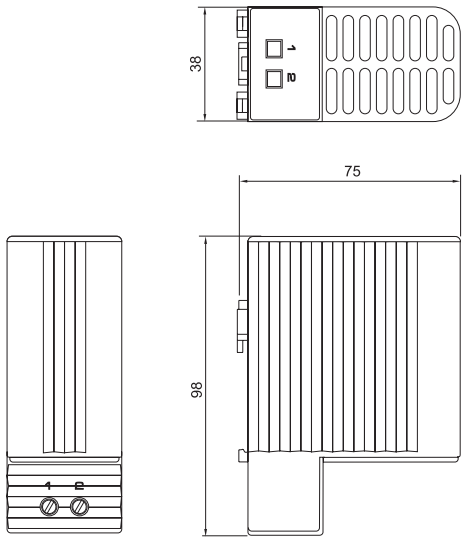

Art. No.	Heating capacity*	Inrush current max.	Weight (approx.)
06040.0-00	10W	1.0A	0.20kg
06030.0-00	20W	2.5A	0.30kg

* at 20°C (68°F) ambient temperature

Semiconductor Heater HG 140 Series 15W to 150W



- Pressure clamp connectors
- Dynamic heating up
- Wide voltage range
- Temperature limiting
- Energy saving
- Clip fixing
- Quick installation

These heaters are used in enclosures where damage from condensation must be prevented, or where the temperature may not fall below a minimum value. The aluminium profile heater body design has a chimney effect and distributes the heat evenly. The pressure clamp connectors save time and simplify installation.

Technical Data

Operating voltage	120-240V AC/DC* (min. 110V, max. 265V)
Heating element	PTC resistor, self regulating and temperature limiting
Heater body	extruded aluminium profile, anodised
Connection	3 pressure clamps for stranded wire 0.5-1.5mm² (with wire end ferrule) and rigid wire 0.5-2.5mm²
Connection casing	plastic according to UL94 V-0, black
Mounting	clip for 35mm DIN rail, EN 50022
Fitting position	vertical
Operating / Storage temperature	-45 to +70°C (-49 to +158°F)
Protection type / Protection class	IP20 / I (earthed)
Approvals	VDE + UL File No. E150057
Accessories	screw fixing, Art. No. 09024.0-00 (1 packing unit = 2 pieces)

*Operating with voltages below 140V AC/DC reduces heating performance by approx. 10%.

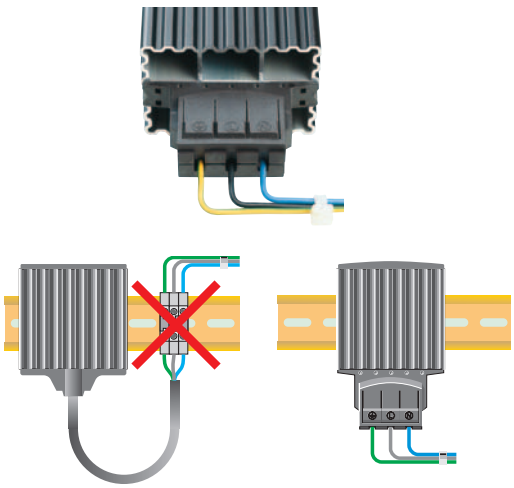

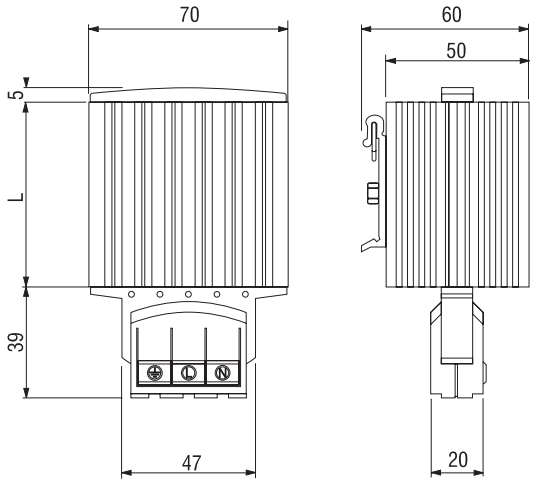

Art. No.	Heating capacity*	Inrush current max.	Length (L)	Weight (approx.)
14000.0-00	15W	1.5A	65mm	0.30kg
14001.0-00	30W	3.0A	65mm	0.30kg
14003.0-00	45W	3.5A	65mm	0.30kg
14005.0-00	60W	2.5A	140mm	0.40kg
14006.0-00	75W	4.0A	140mm	0.50kg
14007.0-00	100W	4.5A	140mm	0.50kg
14008.0-00	150W	9.0A	220mm	0.70kg

*at 20°C (68°F) ambient temperature

Hazardous area Heater CREx 020 Series 50W, 100W



- Large convection surface
- Clip fixing
- Ready for use
- Maintenance free

Compact convection heater for use in areas with explosion hazard for prevention of formation of condensation, temperature fluctuations and for protection against frost in transmitter housings, switch cabinets and measuring equipment.

CE RoHS 2002/95/EC compliant

Technical Data

Explosion protection according to EN	LCIE (Laboratoire Central des Industries Electriques)
Conformity certificate	01 ATEX 6073/03, LCIE N° 06 ATEX Q8011, IECEx LCI 07. 0020
Heating element	high performance cartridge
Heater body	aluminium profile, black anodised
Connection	Si HF-JZ 3 x 0.75mm² cable, length 1m
Connection PE	4mm²
Mounting	clip for 35mm DIN rail, EN 50022
Fitting position	vertical
Operating / Storage temperature	-20 to +40°C (-4 to +104°F) / -45 to +70°C (-49 to +158°F)
Protection type / Protection class	IP65 / I (earthed)

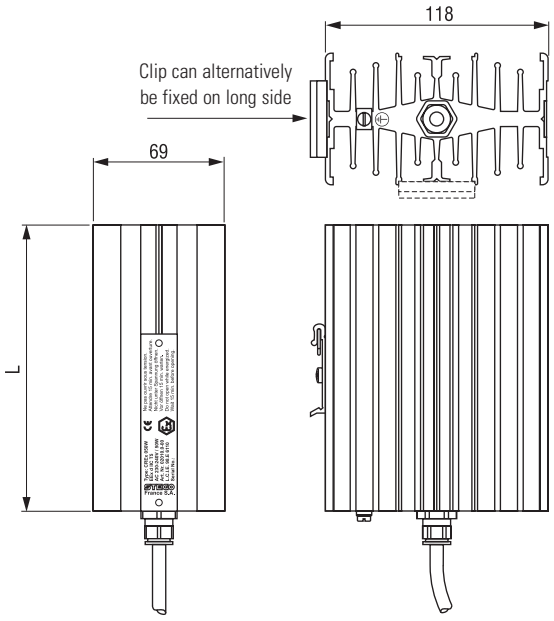



Hazardous area Thermostat REx 011
see page 39

Art. No.	Operating voltage	Heating capacity	Ex protection type	Surface temperature	Length (L)	Weight (approx.)
02010.0-00	230-240VAC	50W	d IIC T5 - Ex tD A21 IP6X T100°C	100°C	150mm	1.30kg
02011.0-00	230-240VAC	100W	d IIC T4 - Ex tD A21 IP6X T135°C	135°C	180mm	1.50kg
02010.0-01	110-120VAC	50W	d IIC T5 - Ex tD A21 IP6X T100°C	100°C	150mm	1.30kg
02011.0-01	110-120VAC	100W	d IIC T4 - Ex tD A21 IP6X T135°C	135°C	180mm	1.50kg

Touch-Safe Heater CS 060 Series (semiconductor) 50W to 150W



- Low surface temperature
- Quick mounting due to clip fixing
- Double insulated (plastic)
- Wide voltage range
- Small size

Touch-safe heater for the use in enclosures with electrical/electronical components. The design of the heater supports the natural convection which results in a high air-current of warm air. The surface temperatures on the accessible side surfaces of the housing are kept down as a result of the heater design. Our complete range of thermostats and hygrostats can directly be connected to the heater CS 060. This heater is also available in a version with plug-in thermostat requiring no additional wiring (CSF 060). Both versions are designed for permanent operation.

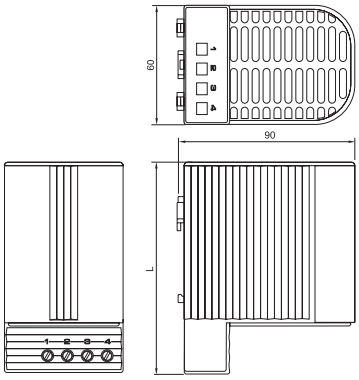

Technical Data

Operating voltage	120-240V AC/DC* (min. 110V, max. 265V)
Heating capacity	see table
Heating element	PTC resistor - temperature limiting
Surface temperature	< 80°C (176°F), except upper protective grille
Connection	4-pole terminal 2,5mm², torque 0.8Nm max.
Casing	plastic according to UL94 V-0, black
Mounting	clip for 35mm DIN rail, EN 50022
Fitting position	vertical
Operating / Storage temperature	-45 to +70°C (-49 to +158°F)
Protection type / Protection class	IP20 / II (double insulated)
Approvals	VDE + UL File No. E150057 (according to UL499
	in combination with UL508A)
Note	other voltages on request

*Operating with voltages below 140V AC/DC reduces heating performance by approx. 10%.

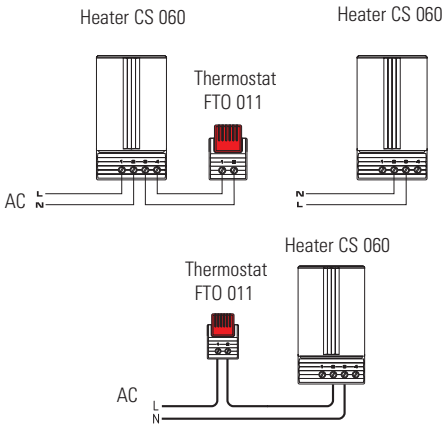

Examples of connection

Heating capacity / Ambient temperature diagram CS 060

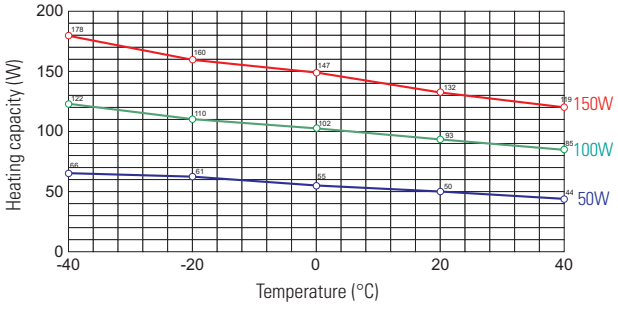

Art. No.	Heating capacity[1)]	Inrush current max.	Air outlet temperature[2)]	Dimensions	Weight (approx.)
06000.0-00	50W	2.5A	+86°C (186.8°F)	110 x 60 x 90mm	0.30kg
06010.0-00	100W	4.5A	+120°C (248°F)	110 x 60 x 90mm	0.30kg
06020.0-00	150W	8A	+145°C (293°F)	150 x 60 x 90mm	0.50kg

[1)] ambient temperature - see Heating capacity / Ambient temperature diagram; [2)] measured 50mm above protective grille;

Touch-Safe Heater CSF 060 Series (semiconductor) 50W to 150W



- Low surface temperature
- Integrated thermostat
- Quick mounting due to clip fixing
- Double insulated (plastic)
- Wide voltage range
- Small size

Touch-safe heater for the use in enclosures with electrical/electronical components. The design of the heater supports the natural convection which results in a high air-current of warm air. The surface temperatures on the accessible side surfaces of the housing are kept down as a result of the heater design. This model with plug-in thermostat does not require additional wiring. The heaters are designed for permanent operation. This heater is also available in a version without thermostat (CS 060).

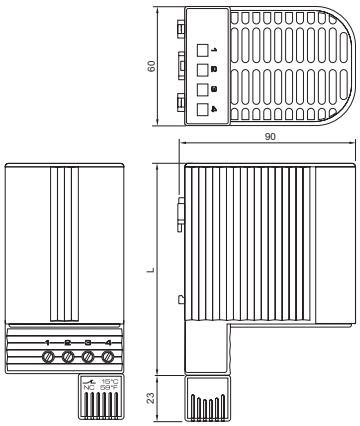

Technical Data

Operating voltage	120-240VAC* (min. 110V, max. 265V)
Heating capacity	see table
Heating element	PTC resistor - temperature limiting
Surface temperature	< 80°C (176°F), except upper protective grille
Connection	4-pole terminal 2,5mm², torque 0.8Nm max.
Casing	plastic according to UL94 V-0, black
Mounting	clip for 35mm DIN rail, EN 50022
Fitting position	vertical
Operating / Storage temperature	-20 to +70°C (-4 to +158°F) / -45 to +70°C (-49 to +158°F)
Protection type / Protection class	IP20 / II (double insulated)
Approvals	VDE + UL File No. E150057 (according to UL499 in combination with UL508A)
Note	other voltages on request

*Operating with voltages below 140VAC reduces heating performance by approx. 10%.

Heater CSF 060

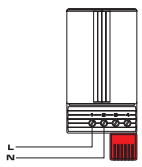

Example of connection

Heating capacity / Ambient temperature diagram CSF 060

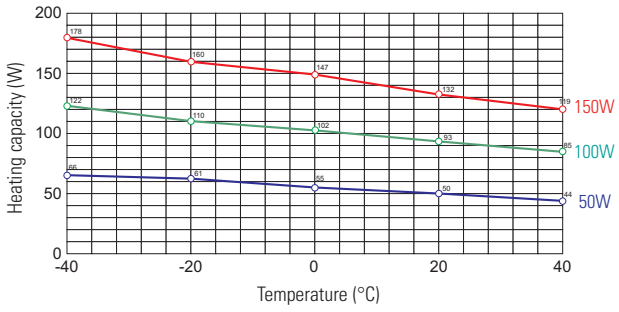

Art. No.	Heating capacity[1]	Inrush current max.	Air outlet temperature[2]	Switch-off temperature[3]	Starting temperature[3]	Dimensions	Weight (approx.)
06001.0-00	50W	2.5A	+86°C (186.8°F)	+15°C (59°F)	+5°C (41°F)	110 x 60 x 90mm	0.30kg
06002.0-00	50W	2.5A	+86°C (186.8°F)	+25°C (77°F)	+15°C (59°F)	110 x 60 x 90mm	0.30kg
06011.0-00	100W	4.5A	+120°C (248°F)	+15°C (59°F)	+5°C (41°F)	110 x 60 x 90mm	0.30kg
06012.0-00	100W	4.5A	+120°C (248°F)	+25°C (77°F)	+15°C (59°F)	110 x 60 x 90mm	0.30kg
06021.0-00	150W	8A	+145°C (293°F)	+15°C (59°F)	+5°C (41°F)	150 x 60 x 90mm	0.50kg
06022.0-00	150W	8A	+145°C (293°F)	+25°C (77°F)	+15°C (59°F)	150 x 60 x 90mm	0.50kg

[1] ambient temperature - see Heating capacity / Ambient temperature diagram; [2] measured 50mm above protective grille; [3] tolerance of ± 5K;

Small semiconductor Fan Heater CS 028 150W



- **Small, compact design**
- **Quiet in operation**
- **Dynamic heating up**
- **Clip or screw fixing**

Fan heater prevents formation of condensation and provides an evenly distributed interior air temperature in enclosures with electric/electronic components. The heater is connected using the internal terminal connectors The CS 028's small size make it ideal for use in enclosures where space is at a premium.

CE RoHS 2002/95/EC compliant

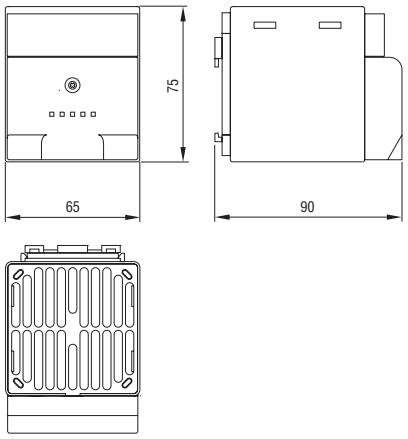

View: back side

Screw fixing

Clip fixing

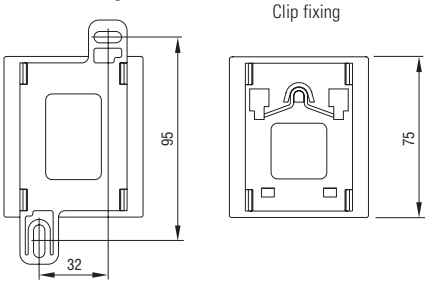

Example of connection

Thermostat KTO 011
(contact breaker, normally closed)

Fan Heater CS 028

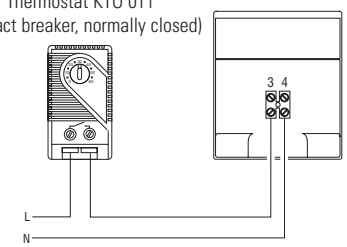

Technical Data

Heating element	PTC heating element
Inrush current max.	2A at 230VAC, 5A at 120VAC
Surface temperature	max. 50°C at casing; 100°C at upper protective grille
	at 20°C (68°F) ambient temperature
Axial fan, ball bearing	air flow 13.8 m³/h, free flow (service life 40,000h at 40°C)
Connection	2-pole clamp max. 2.5mm², clamping screw torque 0.8Nm max.
Casing	plastic according to UL94-0, black
Mounting	clip for 35 mm DIN rail, EN 50022 or screw fixing (Ø 5.3 mm)
Fitting position	vertical
Weight	approx. 0.30kg
Operating / Storage temperature	-45 to +70°C (-49 to +158°F)
Protection type / Protection class	IP20 / II (double insulated)
Note	other voltages on request

Heating capacity / Ambient temperature diagram
CS 028 (150W)

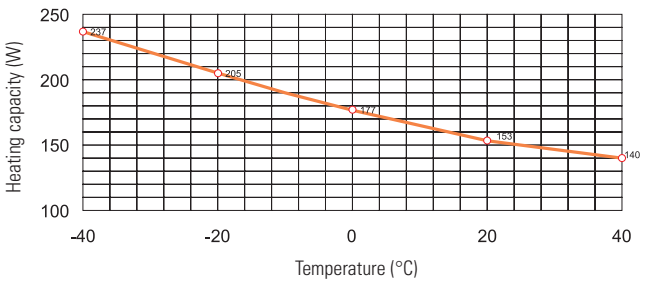

Art. No.	Operating voltage	Heating capacity*	Dimensions	Mounting	Approvals
02800.0-00	230VAC, 50/60Hz	150W	87 x 65 x 75mm	Clip fixing	VDE
02800.0-01	230VAC, 50/60Hz	150W	87 x 65 x 114mm	Screw fixing	VDE
02800.9-00	120VAC, 50/60Hz	150W	87 x 65 x 75mm	Clip fixing	-
02800.9-01	120VAC, 50/60Hz	150W	87 x 65 x 114mm	Screw fixing	-

*at 20°C (68°F) ambient temperature

Space-saving Fan Heater HV 031 / HVL 031 Series 100W to 400W



- **Compact**
- **Flat design**
- **High air through-flow**
- **Temperature safety cut-out**
- **Clip fixing**

The compact high-performance fan heater prevents formation of condensation in control or switch systems and provides an evenly distributed interior air temperature in enclosures. This fan heater is available without fan (HV 031) as well as with fan (HVL 031).

Technical Data

HV 031	Heater without fan (fan mounting kit included)
HVL 031	Heater with fan
Heating element	high performance cartridge
Temperature safety cut-out	to protect against overheating in case of fan failure
Heater body	die-cast aluminium (glass bead blasted)
Connection	3-pole screw connector 2.5mm², clamping torque 0.8Nm max.
Connection casing	plastic according to UL94 V-0, black
Mounting	clip for 35mm DIN rail, EN 50022
Fitting position	horizontal
Operating / Storage temperature	-45 to +70°C (-49 to +158°F)
Protection type / Protection class	IP20 / I (earthed)
Approvals	UL File No. E187294 (VDE: 230VAC only)
HVL 031 only:	
Axial fan, ball bearing	airflow see table
	service life 50,000h at 25°C (77°F)
Connection (axial fan)	2-pole screw connector 2.5mm² (L2/N2)

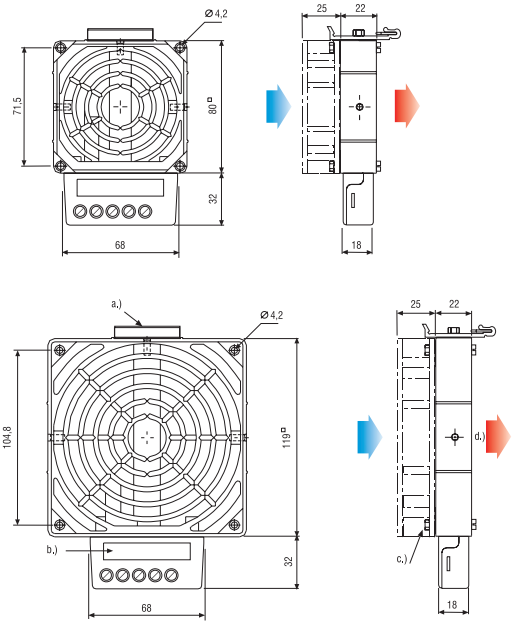

a.) Clip
b.) Type plate
c.) Axial fan
d.) Air direction



Important! Heater may only be operated together with fan. Danger of overheating!

Art. No. HV 031 230VAC, 50/60Hz	Art. No. HV 031 120VAC, 50/60Hz	Heating capacity	Dimensions	Weight (approx.)
03100.0-00	03100.9-00	100W	80 x 112 x 22mm	0.40kg
03101.0-00	03101.9-00	150W	80 x 112 x 22mm	0.40kg
03110.0-00	03110.9-00	200W	119 x 151 x 22mm	0.50kg
03111.0-00	03111.9-00	300W	119 x 151 x 22mm	0.50kg
03112.0-00	03112.9-00	400W	119 x 151 x 22mm	0.50kg

Art. No. HVL 031 230VAC, 50/60Hz	Art. No. HVL 031 120VAC, 50/60Hz	Heating capacity	Airflow min., free flow	Dimensions	Weight (approx.)
03102.0-00	03102.9-00	100W	35m³/h	80 x 112 x 47mm	0.60kg
03103.0-00	03103.9-00	150W	35m³/h	80 x 112 x 47mm	0.60kg
03113.0-00	03113.9-00	200W	108m³/h	119 x 151 x 47mm	0.90kg
03114.0-00	03114.9-00	300W	108m³/h	119 x 151 x 47mm	0.90kg
03115.0-00	03115.9-00	400W	108m³/h	119 x 151 x 47mm	0.90kg

Compact Fan Heater Series HGL 046 250W, 400W



- **Compact Design**
- **Clip fixing**
- **Long service life**
- **Maintenance free**
- **Temperature safety cut-out**

Compact fan heater prevents formation of condensation. The integrated high performance axial fan provides forced air circulation and so guarantees an even temperature in enclosures. With internal terminal connector.

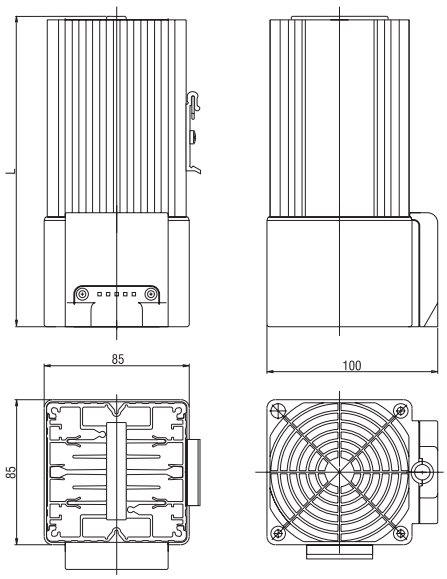

View from below

Technical Data

Heating element	resistance heater
Temperature safety cut-out	to protect against overheating in case of fan failure
Heater body	anodised extruded aluminium profile
Surface temperature	max. 75°C (400W)
Axial fan, ball bearing	Airflow, free flow
	AC: 45m³/h (50Hz) or 54m³/h (60Hz)
	DC: 54m³/h
	service life 50,000h at 25°C (77°F)
Connection	internal connection terminal 1.5mm² with strain relief,
	clamping torque 0.8Nm max.
Connection casing	plastic according to UL94 V-0, black
Mounting	clip for 35mm DIN rail, EN 50022
Fitting position	vertical
Operating / Storage temperature	-45 to +70°C (-49 to +158°F)
Protection type / Protection class	IP20 / I (earthed)

Note: In the case of 24VDC and 48VDC the fan heater has to be switched via a relay. For this purpose we recommend our electronic relay SM 010 (Art. No. 01000.0-00 and 01001.0-00).

Electronic relay SM 010

Control contact, e.g. Temperature regulator KTO 011

Control contact, e.g. Temperature regulator KTO 011

Heater
Fan Heater HGL 046 (DC 24V and 48V) with temperature safety cut-out

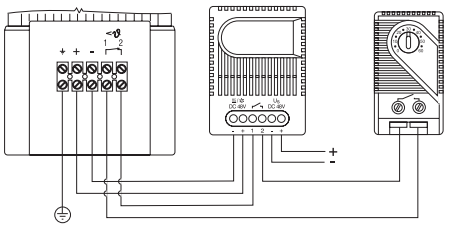

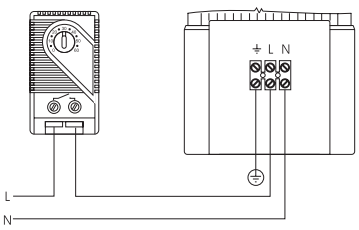

Heater
Fan Heater HGL 046 (AC 230V and 120V) with temperature safety cut-out

Art. No.	Operating voltage	Heating capacity	Length (L)	Weight (approx.)	Approvals
04640.0-00	230VAC, 50/60Hz	250W	182mm	1.10kg	VDE + UL File No. E150057
04641.0-00	230VAC, 50/60Hz	400W	222mm	1.40kg	VDE + UL File No. E150057
04640.9-00	120VAC, 50/60Hz	250W	182mm	1.10kg	VDE + UL File No. E150057
04641.9-00	120VAC, 50/60Hz	400W	222mm	1.40kg	VDE + UL File No. E150057
04640.1-00	24VDC	250W	182mm	1.10kg	-
04640.2-00	48VDC	250W	182mm	1.10kg	-
04641.2-00	48VDC	400W	222mm	1.40kg	-

Semiconductor Fan Heater CR 027 up to 650W



- Compact heater
- Heating capacity adjusts to ambient temperature
- Adjustable temperature range
- Clip fixing
- Optical indicator
- Temperature safety cut-out

Semiconductor fan heaters prevent the formation of condensation and ensure en even temperature in switch and control equipment. The built-in regulator is used to set the desired temperature.

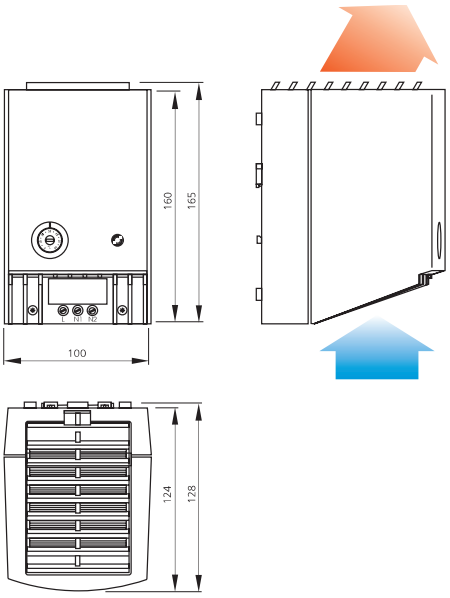

Technical Data

Heating element	PTC resistor, self regulating and temperature limiting
Temperature safety cut-out	to protect against overheating in case of fan failure
Axial fan, ball bearing	airflow see table
	service life 50,000h at 25°C (77°F)
Connection	2-pole clamp 2.5mm², clamping torque 0.8Nm max.
Casing	plastic according to UL94 V-0, light grey
Optical indicator	thermostat control lamp
Mounting	clip for 35mm DIN rail, EN 50022
Fitting position	vertical
Dimensions	100 x 128 x 165mm
Operating / Storage temperature	-45 to +70°C (-49 to +158°F)
Protection type / Protection class	IP20 / II (double insulated)
Approvals	UL File No. E204590

Heating capacity / Ambient temperature diagram CR 027 (50Hz)

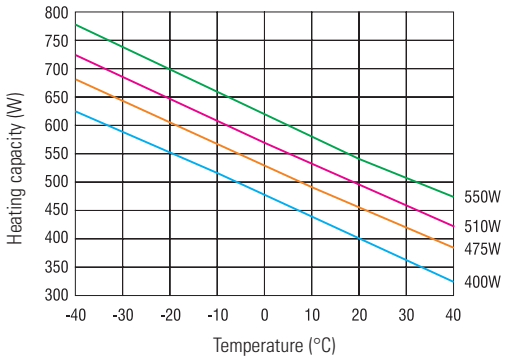

Heating capacity / Ambient temperature diagram CR 027 (60Hz)

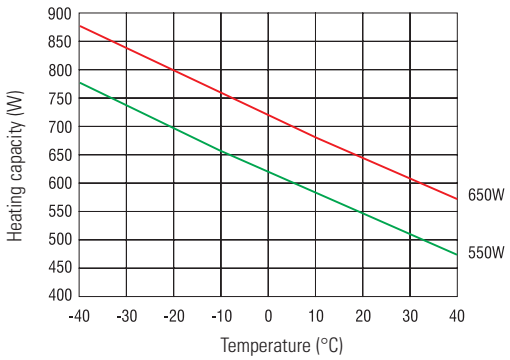

Art. No.	Operating voltage	Heating capacity* (50Hz)	Heating capacity* (60Hz)	Inrush current max.	Airflow, free flow	Setting range Temp. regulator	Weight (approx.)
02700.0-00	220-240VAC, 50/60Hz	475W	550W	11.0A	35m³/h	0 to +60°C	0.90kg
02701.0-00	220-240VAC, 50/60Hz	550W	650W	13.0A	45m³/h	0 to +60°C	1.10kg
02700.9-00	100-120VAC, 50/60Hz	400W	550W	14.0A	35m³/h	+32 to +140°F	0.90kg
02701.9-00	100-120VAC, 50/60Hz	510W	650W	15.0A	45m³/h	+32 to +140°F	1.10kg

*at 20°C (68°F) ambient temperature

Compact high-performance Fan Heater CR 030 950W



Compact design
Double insulated
Integrated thermostat or hygrostat

The compact high performance fan heater prevents formation of condensation and provides an evenly distributed interior air temperature in enclosures with electric/electronic components. The plastic enclosure provides double insulation and acts as protection against contact. The fan heater is available with integrated thermostat or pre-set hygrostat for temperature or humidity control. The CR 030 was designed as a stationary unit for the bottom of the enclosure. For wall fixing the fan heater CR 130 is recommended.

Technical Data

Heating element	high performance cartridge
Temperature safety cut-out	to protect against overheating in case of fan failure,
	automatic reset
Heater body	extruded aluminium profile
Axial fan, ball bearing	airflow 160m³/h, free flow
	service life 50,000h at 25°C (77°F)
Connection	2-pole max. 2.5mm², clamping screw with strain relief,
	torque 0.8Nm max.
Casing	plastic according to UL94 V-0, black
Mounting	screw fixing (M5)
Fitting position	horizontal
Dimensions	168 x 145 x 100mm
Weight	approx. 1.40kg
Operating* / Storage temperature	-45 to +70°C (-49 to +158°F)
Protection type / Protection class	IP20 / II (double insulated)
Note	other heating capacities from 200W up available on request

*Operating temperature of heater with integrated hygrostat: 0 to +60°C (+32 to +140°F)

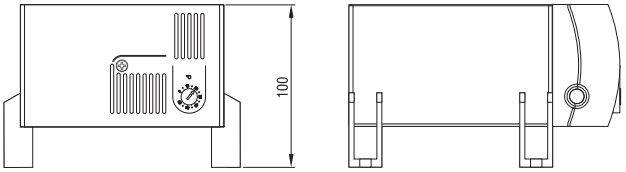

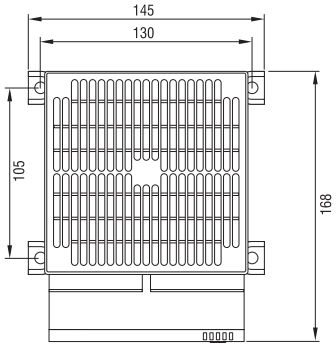

Connection diagram

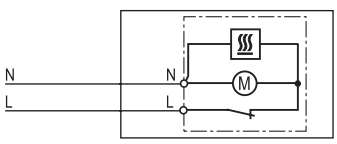

Art. No.	Model	Operating voltage	Heating capacity	Setting range	Approvals
03051.0-00	Fan Heater with thermostat	230VAC, 50/60Hz	950W	0 to +60°C	VDE + UL File No. E234324*
03051.0-02	Fan Heater with hygrostat	230VAC, 50/60Hz	950W	65% RH, factory-set	VDE + UL File No. E234324*
03059.9-00	Fan Heater with thermostat	120VAC, 50/60Hz	950W	+32 to +140°F	UL File No. E234324*

*according to UL499 in combination with UL508A

Compact high-performance Fan Heater CR 130 950W



- **Compact design**
- **Double insulated**
- **Integrated thermostat or hygrostat**
- **Optional clip or screw fixing**

The compact high performance fan heater prevents formation of condensation and provides an evenly distributed interior air temperature in enclosures with electric/electronic components. The plastic enclosure provides double insulation and acts as protection against contact. The fan heater is available with integrated thermostat or pre-set hygrostat for temperature or humidity control. The CR 130 was designed as a stationary unit for wall fixing. For fixing on the bottom of the enclosure the fan heater CR 030 is recommended.

Technical Data

Heating element	high performance cartridge
Temperature safety cut-out	to protect against overheating in case of fan failure,
	automatic reset
Heater body	extruded aluminium profile
Axial fan, ball bearing	airflow 160m³/h, free flow
	service life 50,000h at 25°C (77°F)
Connection	2-pole max. 2.5mm², clamping screw with strain relief,
	torque 0.8Nm max.
Casing	plastic according to UL94 V-0, black
Mounting	clip for 35mm DIN rail, EN 50022 or screw fixing (M6)
Fitting position	horizontal
Dimensions	182 x 160 x 99mm
Weight	approx. 1.45kg
Operating* / Storage temperature	-45 to +70°C (-49 to +158°F)
Protection type / Protection class	IP20 / II (double insulated)
Note	other heating capacities from 200W up available on request

*Operating temperature of heater with integrated hygrostat: 0 to +60°C (+32 to +140°F)

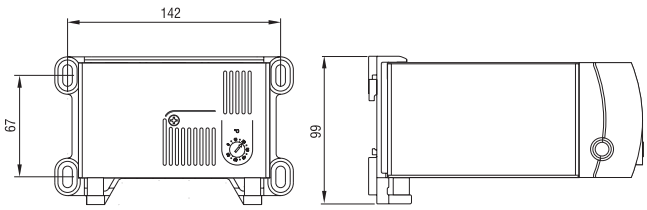

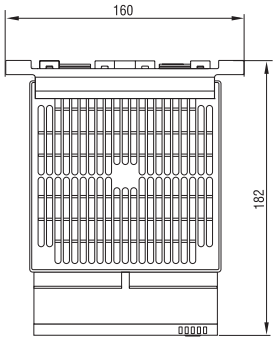

Connection diagram

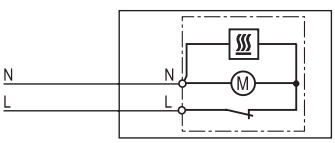

Art. No.	Model	Operating voltage	Heating capacity	Setting range	Approvals
13051.0-00	Fan Heater with thermostat	230VAC, 50/60Hz	950W	0 to +60°C	VDE + UL File No. E234324*
13051.0-02	Fan Heater with hygrostat	230VAC, 50/60Hz	950W	65% RH, factory-set	VDE + UL File No. E234324*
13059.9-00	Fan Heater with thermostat	120VAC, 50/60Hz	950W	+32 to +140°F	UL File No. E234324*

*according to UL499 in combination with UL508A

Compact high-performance Fan Heater CS 030 (Semiconductor) 1,200W



- Compact design
- High heating performance
- Double insulated
- Integrated thermostat (optional)

The compact high performance fan heater prevents formation of condensation and provides an evenly distributed interior air temperature in enclosures with electric/electronic components. The plastic enclosure provides double insulation and acts as protection against contact. The fan heater is available with optional integrated thermostat for temperature control. The CS 030 was designed as a stationary unit for the bottom of the enclosure. For wall fixing the fan heater CS 130 is recommended.

CE RoHS 2002/95/EC compliant

Technical Data

Heating element	PTC resistor - temperature limiting
Temperature safety cut-out	to protect against overheating in case of fan failure
Axial fan, ball bearing	airflow 160m³/h, free flow
	service life 50,000h at 25°C (77°F)
Connection	2-pole max. 2.5mm², clamping screw with strain relief,
	torque 0.8Nm max.
Casing	plastic according to UL94 V-0, black
Mounting	screw fixing (M5)
Fitting position	horizontal
Dimensions	168 x 145 x 120mm
Weight	approx. 1.20kg
Operating / Storage temperature	-45 to +70°C (-49 to +158°F)
Protection type / Protection class	IP20 / II (double insulated)

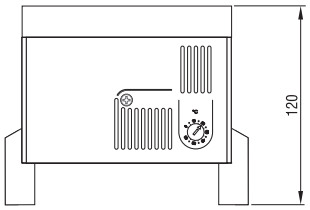

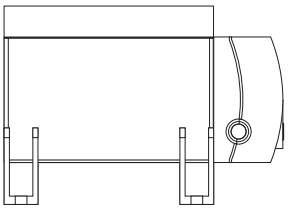

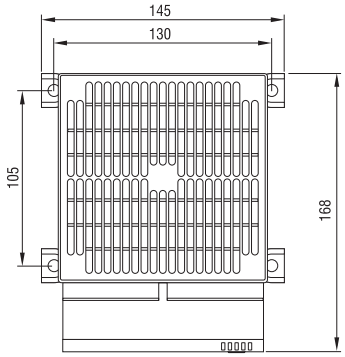

Connection diagram

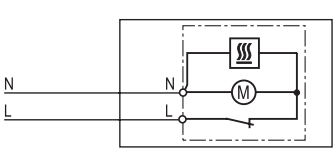

Heating capacity / Ambient temperature diagram CS 030

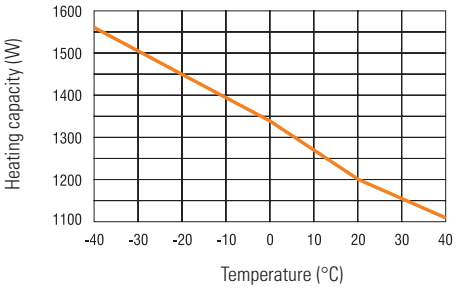

Art. No.	Model	Operating voltage	Heating capacity*	Inrush current max.	Setting range	Approvals
03060.0-00	Fan Heater with thermostat	230VAC, 50/60Hz	1,200W	13A	0 to +60°C	VDE; (UL intended)
03060.0-01	Fan Heater without thermostat	230VAC, 50/60Hz	1,200W	13A	-	VDE; (UL intended)
03060.9-00	Fan Heater with thermostat	120VAC, 50/60Hz	1,200W	16A	+32 to +140°F	UL intended
03060.9-01	Fan Heater without thermostat	120VAC, 50/60Hz	1,200W	16A	-	UL intended

* at 20°C (68°F) ambient temperature

Compact high-performance Fan Heater CS 130 (Semiconductor) 1,200W



- **Compact design**
- **High heating performance**
- **Double insulated**
- **Integrated thermostat (optional)**
- **Optional clip or screw fixing**

The compact high performance fan heater prevents formation of condensation and provides an evenly distributed interior air temperature in enclosures with electric/electronic components. The plastic enclosure provides double insulation and acts as protection against contact. The fan heater is available with optional integrated thermostat for temperature control. The CS 130 was designed as a stationary unit for wall fixing. For fixing on the bottom of the enclosure the fan heater CS 030 is recommended.

CE RoHS 2002/95/EC compliant

Technical Data

Heating element	PTC resistor - temperature limiting
Temperature safety cut-out	to protect against overheating in case of fan failure
Axial fan, ball bearing	airflow 160m³/h, free flow
	service life 50,000h at 25°C (77°F)
Connection	2-pole max. 2.5mm², clamping screw with strain relief,
	torque 0.8Nm max.
Casing	plastic according to UL94 V-0, black
Mounting	clip for 35mm DIN rail, EN 50022 or screw fixing (M6)
Fitting position	horizontal
Dimensions	182 x 160 x 120mm
Weight	approx. 1.25kg
Operating / Storage temperature	-45 to +70°C (-49 to +158°F)
Protection type / Protection class	IP20 / II (double insulated)

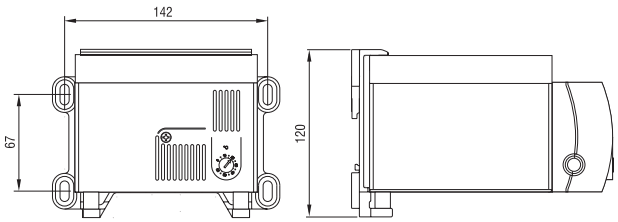

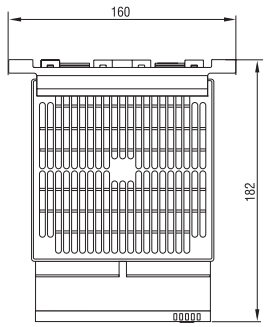

Connection diagram

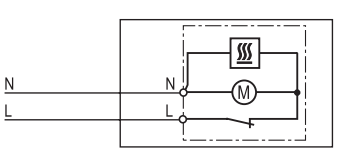

Heating capacity / Ambient temperature diagram CS 130

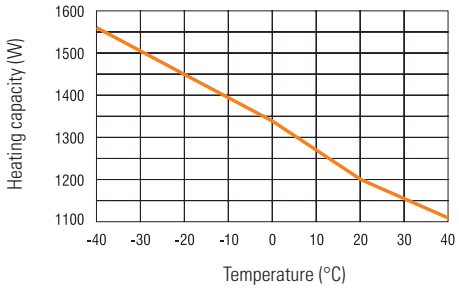

Art. No.	Model	Operating voltage	Heating capacity*	Inrush current max.	Setting range	Approvals
13060.0-00	Fan Heater with thermostat	230VAC, 50/60Hz	1,200W	13A	0 to +60°C	VDE; (UL intended)
13060.0-01	Fan Heater without thermostat	230VAC, 50/60Hz	1,200W	13A	-	VDE; (UL intended)
13060.9-00	Fan Heater with thermostat	120VAC, 50/60Hz	1,200W	16A	+32 to +140°F	UL intended
13060.9-01	Fan Heater without thermostat	120VAC, 50/60Hz	1,200W	16A	-	UL intended

* at 20°C (68°F) ambient temperature

Filter Fan FF 018 Series — 21m³/h to 102m³/h



- **Very low noise**
- **Minimal depth in enclosure**
- **Functional design**
- **Time-saving installation**
- **Weather proof and UV resistant**

Filter fans are used to provide an optimum climate in enclosures. The interior temperature of an enclosure can be reduced by channelling cooler filtered outside air into the enclosure thus expelling heated internal air. The resulting air flow prevents formation of localised hot pockets and protects the electronic components from overheating. The plastic used for the hood of this filter fan series is highly weather proof and UV light resistant.

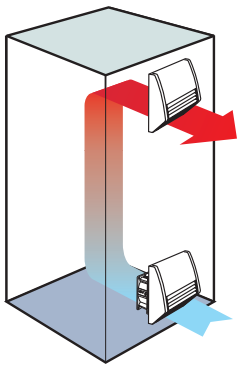

Enclosure air-conditioning using a filter fan and exit filter

Technical Data

Axial fan, ball bearing	service life min. 50,000h at 25°C/77°F (65% RH)
	fan body aluminium, rotor plastic
Connection	2 wires with pressure clamps 2.5mm², length 100mm
Casing (filter fan and exit filter)	Plastic according to UL94 V-0, light grey
Hood (filter fan and exit filter)	Plastic according to UL94 V-0, light grey;
	weather proof and UV light resistant according to UL746C (f1)
Mounting frame	with double-sided industrial adhesive band for fixing to the
	outside of enclosure; certain operating circumstances can
	make the additional use of screws necessary (see drilling
	template); included in the delivery of the filter fans is a
	template for the enclosure cut-out
Filter mat	G4 acc. to DIN EN 779, filtering degree 94%
Filter material	synthetic fibre with progressive construction, temperature
	resistant to 100°C, self-extinguishing class F1;
	moisture resistant to 100% RH, reusable – cleaning by
	washing or vacuuming
Operating / Storage temperature	-45 to +70°C (-49 to +158°F)
Prot. Type / Protection class	IP54* / I (earthed)

*Using fine filter mats type F5 increases the protection type to IP55, but reduces the air volume.

Special features

- The **self-adhesive seal** of the mounting frame prevents dust and water from entering the cabinet.
- **Functional design** of the intake and exit fan hoods very effectively prevents direct intrusion of falling water and dust. The advantage is that the filter mat does not get so quickly contaminated with dirt and thus does not need to be exchanged so often.
- The **air channelling** makes the filter fan particularly quiet in operation.
- Functional and **modern design** enables time-saving assembly and maintenance.
- All filter fan models are also available with **integrated airflow monitor**.
- EMC versions and other voltages on request.
- The **direction of air can easily be switched** by reversing the axial fan (sizes 1 to 3).

Filter Fan FF 018 Series

Art. No.	Operating voltage	Air volume, free flow	Air volume with exit filter	Current consumption	Power consumption	Average noise level (DIN EN ISO 4871)	Depth in enclosure	Enclosure cut-out	Weight (approx.)	Approvals
01800.0-00	230VAC, 50Hz	21m³/h	16m³/h	80mA	13W	31dB (A)	45mm	97 x 97mm + 0.4	0.60kg	VDE + UL File No. E234324
01801.0-00	230VAC, 50Hz	55m³/h	42m³/h	100mA	15W	40dB (A)	58mm	125 x 125mm + 0.4	1.00kg	VDE + UL File No. E234324
01802.0-00	230VAC, 50Hz	102m³/h	68m³/h	100mA	15W	39dB (A)	86mm	176 x 176mm + 0.4	1.30kg	VDE + UL File No. E234324
01800.0-01	120VAC, 60Hz	24m³/h	18m³/h	160mA	13W	31dB (A)	45mm	97 x 97mm + 0.4	0.60kg	UL File No. E234324
01801.0-01	120VAC, 60Hz	63m³/h	48m³/h	180mA	15W	40dB (A)	58mm	125 x 125mm + 0.4	1.00kg	UL File No. E234324
01802.0-01	120VAC, 60Hz	117m³/h	78m³/h	180mA	15W	39dB (A)	86mm	176 x 176mm + 0.4	1.30kg	UL File No. E234324

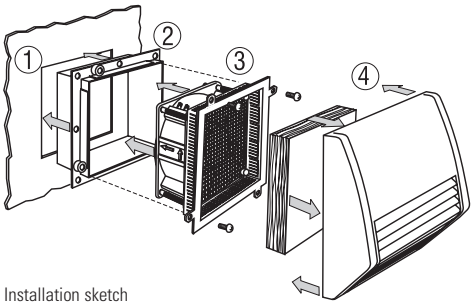

Installation sketch

Time-saving assembly and maintenance

STEGO's filter fans are easily installed by one person **from outside** the cabinet.

1.) Make cut-out in the cabinet wall. The cut edge of the cabinet opening should be free of dirt, filings and grease. A template for the enclosure cut-out is included in the delivery of the filter fan.
2.) Remove protective film from the sealing strips on the mounting frame. Press mounting frame into the cabinet opening. The frame stays permanently in the cabinet. (For size 176mm and up we recommend additional screw fixing.)
3.) Electrically connect the axial fan using the clip connectors. Push the unit into the mounting frame. Fix using screws.
4.) Insert the filter mat in the hood. Clip on. Finished.

Changing the filter mat or fan is quickly done by one person. To change the filter mat simply remove the filter hood, insert the new mat and snap the hood back again. No tools required. Maintenance of the fan can easily be done without removing the mounting frame (2).

Dimensional Drawing

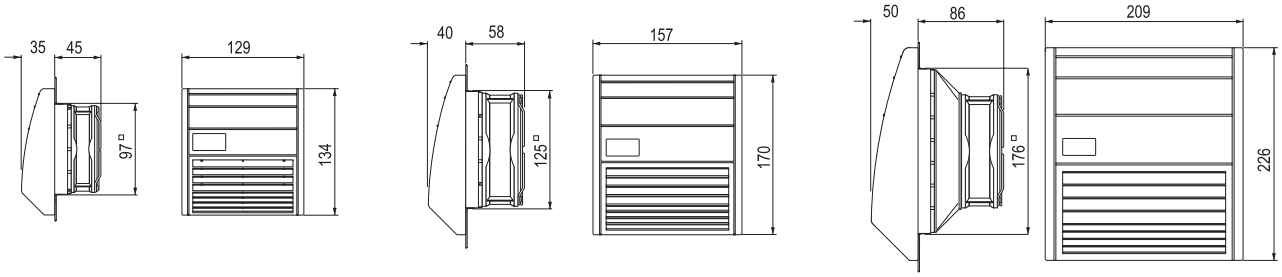

Drilling template for mounting frame

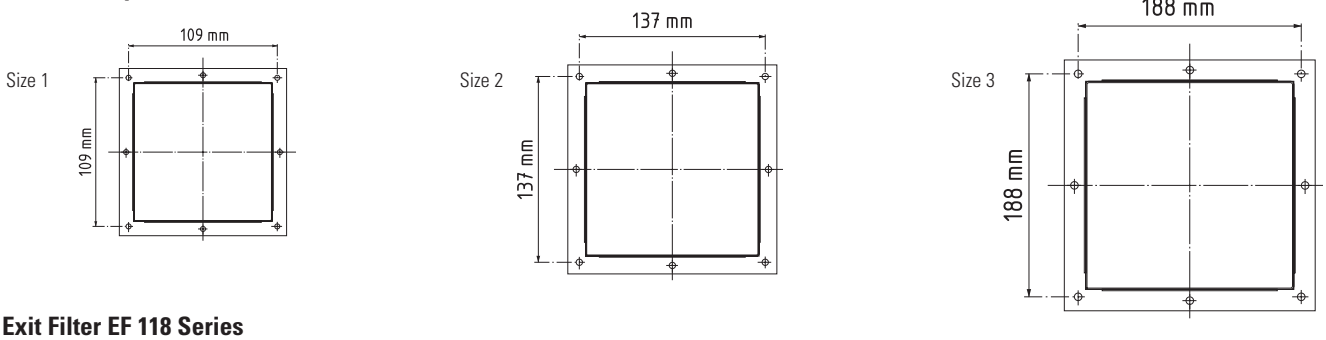

Exit Filter EF 118 Series

Art. No.	Depth in enclosure	Enclosure cut-out	Weight (approx.)	Filter mat	Protection type
11800.0-00	16mm	97 x 97mm + 0.4	0.30kg	G4 acc. to DIN EN 779, filtering degree 94%	IP54*
11801.0-00	16mm	125 x 125mm + 0.4	0.40kg	G4 acc. to DIN EN 779, filtering degree 94%	IP54*
11802.0-00	16mm	176 x 176mm + 0.4	0.60kg	G4 acc. to DIN EN 779, filtering degree 94%	IP54*

*Using fine filter mats type F5 increases the protection type to IP55, but reduces the air volume.

Filter Mats FM 086 / FFM 086

Filter mat	89 x 89mm	118 x 118mm	168 x 168mm
G4 (1 packing unit = 3 pcs.)	Art. No. 08600.0-00	Art. No. 08601.0-00	Art. No. 08602.0-00
F5 (1 packing unit = 3 pcs.)	Art. No. 08603.0-00	Art. No. 08604.0-00	Art. No. 08605.0-00

Filter Fan with Airflow Monitor FFLC 218 (Normally Closed)

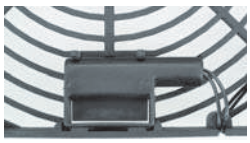

Airflow monitor integrated in protective grille of filter fan, e.g. Art. No. 21800.0-00

Art. No.	Operating voltage	Air volume, free flow	Air volume with exit filter	Current consumption	Power consumption	Average noise level (DIN EN ISO 4871)	Depth in enclosure	Enclosure cut-out	Weight (approx.)
21800.0-00	230VAC, 50Hz	21m³/h	16m³/h	80mA	13W	31dB (A)	45mm	97 x 97mm + 0.4	0.60kg
21801.0-00	230VAC, 50Hz	55m³/h	42m³/h	100mA	15W	40dB (A)	58mm	125 x 125mm + 0.4	1.00kg
21802.0-00	230VAC, 50Hz	102m³/h	68m³/h	100mA	15W	39dB (A)	86mm	176 x 176mm + 0.4	1.30kg
21800.0-01	120VAC, 60Hz	24m³/h	18m³/h	160mA	13W	31dB (A)	45mm	97 x 97mm + 0.4	0.60kg
21801.0-01	120VAC, 60Hz	63m³/h	48m³/h	180mA	15W	40dB (A)	58mm	125 x 125mm + 0.4	1.00kg
21802.0-01	120VAC, 60Hz	117m³/h	78m³/h	180mA	15W	39dB (A)	86mm	176 x 176mm + 0.4	1.30kg

For technical data see Airflow Monitor LC 013/LCF 013 (Normally Closed, Normally Open)

Filter Fan FF 018 Series 200m³/h



- Low maintenance
- High through-flow air volume
- Functional design
- Time-saving installation
- Weather proof and UV resistant

Filter fans are used to provide an optimum climate in enclosures. The interior temperature of an enclosure can be reduced by channelling cooler filtered outside air into the enclosure thus expelling heated internal air. The resulting air flow prevents formation of localised hot pockets and protects the electronic components from overheating. The plastic used for the hood of this filter fan series is highly weather proof and UV light resistant.

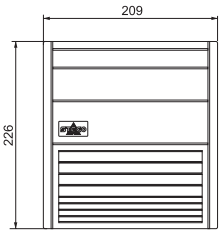

Filter Fan

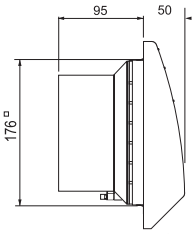

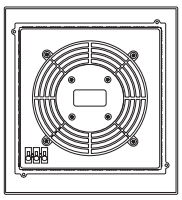
View from rear

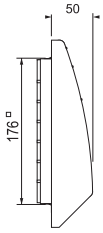

Exit filter

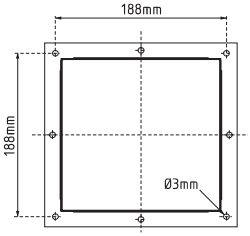

Drilling template for mounting frame

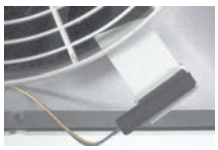
Airflow monitor integrated in protective grille of filter fan, e.g. Art. No. 21804.0-00

Technical Data

Axial fan, ball bearing	service life min. 50,000h at 25°C/77°F (65% RH)
	fan body aluminium, rotor metal
Connection	3-pole clamp for 2.5mm², clamping torque 0.8Nm max.
Casing (filter fan and exit filter)	Plastic according to UL94 V-0, light grey
Hood (filter fan and exit filter)	Plastic according to UL94 V-0, light grey;
	weather proof and UV light resistant according to UL746C (f1)
Mounting frame	with double-sided industrial adhesive band for fixing to the
	outside of enclosure; certain operating circumstances can
	make the additional use of screws necessary (see drilling
	template); included in the delivery of the filter fans is a
	template for the enclosure cut-out
Filter mat	G4 acc. to DIN EN 779, filtering degree 94%
Filter material	synthetic fibre with progressive construction, temperature
	resistant to 100°C, self-extinguishing class F1;
	moisture resistant to 100% RH, reusable – cleaning by
	washing or vacuuming
Operating / Storage temperature	-45 to +70°C (-49 to +158°F)
Prot. Type / Protection class	IP54* / I (earthed)

*Using fine filter mats type F5 increases the protection type to IP55, but reduces the air volume.

Filter Fan FF 018 Series

Art. No.	Operating voltage	Air volume, free flow	Air volume with exit filter	Current consumption	Power consumption	Average noise level (DIN EN ISO 4871)	Depth in enclosure	Enclosure cut-out	Weight (approx.)	Approvals
01804.0-00	230VAC, 50Hz	200m³/h	125m³/h	320mA	45W	52dB (A)	95mm	176 x 176mm + 0.4	1.70kg	UL File No. E234324
01804.0-01	120VAC, 60Hz	230m³/h	143m³/h	470mA	39W	52dB (A)	95mm	176 x 176mm + 0.4	1.70kg	UL File No. E234324

Exit Filter EF 118 Series

Art. No.	Depth in enclosure	Enclosure cut-out	Weight (approx.)	Filter mat	Protection type
11802.0-00	16mm	176 x 176mm + 0.4	0.60kg	G4 acc. to DIN EN 779, filtering degree 94%	IP54*

*Using fine filter mats type F5 increases the protection type to IP55, but reduces the air volume.

Filter Mats FM 086 / FFM 086

Filter mat	168 x 168mm
G4 (1 packing unit = 3 pcs.)	Art. No. 08602.0-00
F5 (1 packing unit = 3 pcs.)	Art. No. 08605.0-00

Filter Fan with Airflow Monitor FFLC 218 (Normally Closed)

Art. No.	Operating voltage	Air volume, free flow	Air volume with exit filter	Current consumption	Power consumption	Average noise level (DIN EN ISO 4871)	Depth in enclosure	Enclosure cut-out	Weight (approx.)
21804.0-00	230VAC, 50Hz	200m³/h	125m³/h	320mA	45W	52dB (A)	95mm	176 x 176mm + 0.4	1.70kg
21804.0-01	120VAC, 60Hz	230m³/h	143m³/h	470mA	39W	52dB (A)	95mm	176 x 176mm + 0.4	1.70kg

For technical data see Airflow Monitor LC 013/LCF 013 (Normally Closed, Normally Open)

Filter Fan FF 018 Series 300m³/h



- **Very low noise**
- **Minimal depth in enclosure**
- **High through-flow air volume**
- **Uniform air circulation**
- **High reliability**
- **Weather proof and UV resistant**

Filter fans are used to provide an optimum climate in enclosures. The interior temperature of an enclosure can be reduced by channelling cooler filtered outside air into the enclosure thus expelling heated internal air. The resulting air flow prevents formation of localised hot pocket and protects the electronic components from overheating. **Four integrated axial fans** provide a particularly high and uniform air circulation thus contributing to higher reliability. The plastic used for the hood of this filter fan series is highly weather proof and UV light resistant.

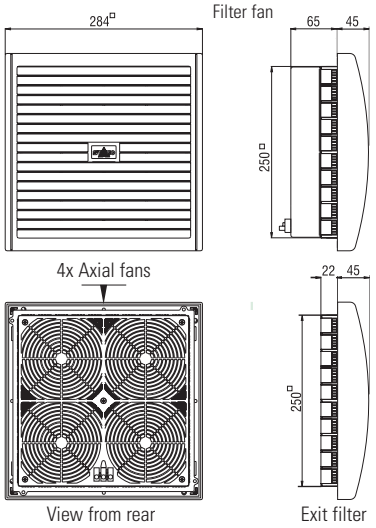

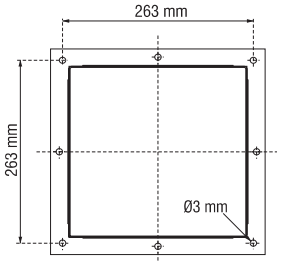

Drilling template for mounting frame

Technical Data

Axial fan, ball bearing	service life min. 50,000h at 25°C/77°F (65% RH)
	fan body aluminium, rotor plastic
Connection	3-pole clamp for 2.5mm², clamping torque 0.8Nm max.
Casing (filter fan and exit filter)	Plastic according to UL94 V-0, light grey
Hood (filter fan and exit filter)	Plastic according to UL94 V-0, light grey;
	weather proof and UV light resistant according to UL746C (f1)
Mounting frame	with double-sided industrial adhesive band for fixing to the
	outside of enclosure; certain operating circumstances can
	make the additional use of screws necessary (see drilling
	template); included in the delivery of the filter fans is a
	template for the enclosure cut-out
Filter mat	G4 acc. to DIN EN 779, filtering degree 94%
Filter material	synthetic fibre with progressive construction, temperature
	resistant to 100°C, self-extinguishing class F1;
	moisture resistant to 100% RH, reusable – cleaning by
	washing or vacuuming
Operating / Storage temperature	-45 to +70°C (-49 to +158°F)
Protection type / Protection class	IP54* / I (earthed)

*Using fine filter mats type F5 increases the protection type to IP55, but reduces the air volume.

Filter Fan FF 018 Series

Art. No.	Operating voltage	Air volume, free flow	Air volume with exit filter	Current consumption	Power consumption	Average noise level (DIN EN ISO 4871)	Depth in enclosure	Enclosure cut-out	Weight (approx.)	Approvals
01803.0-00	230VAC, 50Hz	300m³/h	230 m³/h	400 mA	60W	53dB (A)	65mm	250 x 250mm + 0.4	3.30kg	UL File No. E234324
01803.0-01	120VAC, 60Hz	345m³/h	264 m³/h	700 mA	60W	53dB (A)	65mm	250 x 250mm + 0.4	3.30kg	UL File No. E234324

Exit Filter EF 118 Series

Art. No.	Depth in enclosure	Enclosure cut-out	Weight (approx.)	Filter mat	Protection type
11803.0-00	22mm	250 x 250mm + 0.4	1.00kg	G4 acc. to DIN EN 779, filtering degree 94%	IP54*

*Using fine filter mats type F5 increases the protection type to IP55, but reduces the air volume.

Filter Mats FM 086 / FFM 086

Filter mat	247 x 247mm
G4 (1 packing unit = 3 pcs.)	Art. No. 08608.0-00
F5 (1 packing unit = 3 pcs.)	Art. No. 08609.0-00

Filter Fan FF 018 Series 550m³/h



- High through-flow air volume
- Functional design
- Time-saving installation
- Weather proof and UV resistant

Filter fans are used to provide an optimum climate in enclosures. The interior temperature of an enclosure can be reduced by channelling cooler filtered outside air into the enclosure thus expelling heated internal air. The resulting air flow prevents formation of localised hot pocket and protects the electronic components from overheating. The high-performance axial fan provides high air circulation. The plastic used for the hood of this filter fan series is highly weather proof and UV light resistant.

Filter fan

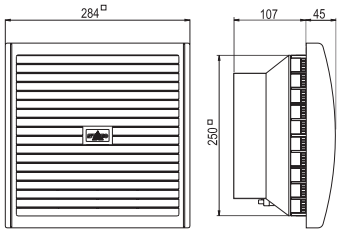

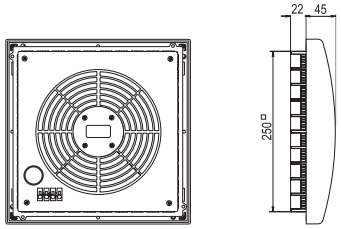

View from rear

Exit filter

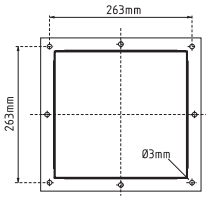

Drilling template for mounting frame

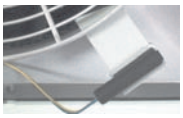

Airflow monitor integrated in protective grille of filter fan, e.g. Art. No. 21805.0-00

Technical Data

Axial fan, ball bearing	service life min. 50,000h at 25°C/77°F (65% RH)
	fan body aluminium, rotor metal
Connection	3-pole clamp for 2.5mm², clamping torque 0.8Nm max.
Casing (filter fan and exit filter)	Plastic according to UL94 V-0, light grey
Hood (filter fan and exit filter)	Plastic according to UL94 V-0, light grey;
	weather proof and UV light resistant according to UL746C (f1)
Mounting frame	with double-sided industrial adhesive band for fixing to the
	outside of enclosure; certain operating circumstances can
	make the additional use of screws necessary (see drilling
	template); included in the delivery of the filter fans is a
	template for the enclosure cut-out
Filter mat	G4 acc. to DIN EN 779, filtering degree 94%
Filter material	synthetic fibre with progressive construction, temperature
	resistant to 100°C, self-extinguishing class F1;
	moisture resistant to 100% RH, reusable – cleaning by
	washing or vacuuming
Operating / Storage temperature	-45 to +70°C (-49 to +158°F)
Prot. Type / Protection class	IP54* / I (earthed)

*Using fine filter mats type F5 increases the protection type to IP55, but reduces the air volume.

Filter Fan FF 018 Series

Art. No.	Operating voltage	Air volume, free flow	Air volume with exit filter	Current consumption	Power consumption	Average noise level (DIN EN ISO 4871)	Depth in enclosure	Enclosure cut-out	Weight (approx.)	Approvals
01805.0-00	230VAC, 50Hz	550m³/h	300m³/h	300mA	64W	65dB (A)	107mm	250 x 250mm + 0.4	2.70kg	UL File No. E234324
01805.0-01	120VAC, 60Hz	632m³/h	345m³/h	780mA	85W	65dB (A)	107mm	250 x 250mm + 0.4	2.70kg	UL File No. E234324

Exit Filter EF 118 Series

Art. No.	Depth in enclosure	Enclosure cut-out	Weight (approx.)	Filter mat	Protection type
11803.0-00	22mm	250 x 250mm + 0.4	1.00kg	G4 acc. to DIN EN 779, filtering degree 94%	IP54*

*Using fine filter mats type F5 increases the protection type to IP55, but reduces the air volume.

Filter Mats FM 086 / FFM 086

Filter mat	247 x 247mm
G4 (1 packing unit = 3 pcs.)	Art. No. 08608.0-00
F5 (1 packing unit = 3 pcs.)	Art. No. 08609.0-00

Filter Fan with Airflow Monitor FFLC 218 (Normally Closed)

Art. No.	Operating voltage	Air volume, free flow	Air volume with exit filter	Current consumption	Power consumption	Average noise level (DIN EN ISO 4871)	Depth in enclosure	Enclosure cut-out	Weight (approx.)
21805.0-00	230VAC, 50Hz	550m³/h	300m³/h	300mA	64W	65dB (A)	107mm	250 x 250mm + 0.4	2.70kg
21805.0-01	120VAC, 60Hz	632m³/h	345m³/h	780mA	85W	65dB (A)	107mm	250 x 250mm + 0.4	2.70kg

For technical data see Airflow Monitor LC 013/LCF 013 (Normally Closed, Normally Open)



- **Filter changeable from outside**
- **Safe, lockable**
- **Impact resistant**
- **Weather proof and UV resistant**

The outdoor filter fan can be used in outdoor enclosures where warm air has to be dissipated on account of increased thermic development. To clean and exchange the filter mat, it is only necessary to open the lockable door of the outdoor hood. A protection type of IP55 is achieved due to the special design of the hood and the use of fine filter mats. The plastic casing is impact resistant, highly weather proof and resistant to UV light.

Technical Data

Axial fan, ball bearing	service life min. 50,000h at 25°C/77°F (65% RH)
	fan body aluminium, rotor plastic
Connection	2 wires with pressure clamps 2.5mm², length 100mm
Filter fan and exit filter casing	casing material high impact plastic ASA, light grey
	burning behaviour according to UL94 H-B;
	high resistance to weather and UV
Mounting frame	with double-sided industrial adhesive band for fixing to the
	outside of enclosure; certain operating circumstances can
	make the additional use of screws necessary (see drilling
	template); included in the delivery of the filter fans is a
	template for the enclosure cut-out
Filter mat	F5 acc. to DIN EN 779, filtering degree 98%
Filter material	synthetic fibre with progressive construction, temperature
	resistant to 100°C, self-extinguishing class F1;
	moisture resistant to 100% RH
Operating / Storage temperature	-45 to +70°C (-49 to +158°F)
Protection type / Protection class	IP55 / I (earthed)
Approvals	UL File No. E234324

Outdoor Filter Fan

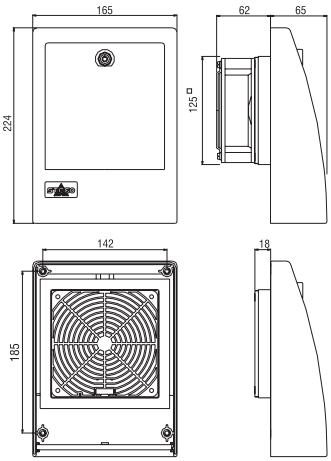

View from rear

Outdoor Exit filter

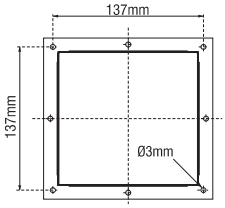

Drilling template for mounting frame

The hood is fixed permanently to the enclosure from the inside using screws. Filter mats can be easily changed from outside the enclosure through the lockable door in the hood.

Outdoor Filter Fan FF 018 Series

Art. No.	Operating voltage	Air volume, free flow	Current consumption	Power consumption	Average noise level (DIN EN ISO 4871)	Depth in enclosure	Enclosure cut-out	Weight (approx.)
01821.0-00	230VAC, 50Hz	20m³/h	100mA	15W	40dB (A)	62mm	125 x 125mm + 0.4	1.20kg
01821.0-02	120VAC, 60Hz	23m³/h	180mA	15W	40dB (A)	62mm	125 x 125mm + 0.4	1.20kg

Exit Filter EF 118 Series

Art. No.	Depth in enclosure	Enclosure cut-out	Weight (approx.)	Filter mat	Protection type
11821.0-00	16mm	125 x 125mm + 0.4	0.60kg	F5 acc. to DIN EN 779, filtering degree 98%	IP55

Filter Mats FFM 086

Filter mat	122 x 122mm
F5 (1 packing unit =3 pcs.)	Art. No. 08607.0-00

Roof Filter Fan RFF 018 Series 350m³/h





- **Very low noise**
- **Minimal depth in enclosure**
- **High through-flow air volume**
- **Uniform air circulation**
- **High reliability**
- **Time-saving installation**

Roof filter fans and roof exit filters find use in enclosures, from which warm air has to be diverted due to increased heat development. The ready-to-connect and low-noise roof filter fan, which houses **four axial fans**, is used to expel warm air from within the enclosure which has been generated by the stray power of the components. The roof exit filter provides passive ventilation.

Technical Data

Axial fans, ball bearing	service life 50,000h at 25°C/77°F (65% RH)
	fan body aluminium, rotor plastic
Connection	3-pole clamp for 2.5mm²
Casing	plastic acc. to UL94 V-0/lacquered steel sheet, light grey
Filter mat	G3 acc. to DIN EN 779, filtering degree 85%
Filter material	synthetic fibre with progressive construction, temperature
	resistant to 100°C, self-extinguishing class F1;
	moisture resistant to 100% RH, reusable – cleaning by
	washing or vacuuming
Operating / Storage temperature	-45 to +70°C (-49 to +158°F)
Protection type	IP43 (with filter mat G3) / IP33 (without filter mat)
Protection class	I (earthed)
Approvals	UL File No. E234324

Roof Filter Fan RFF 018

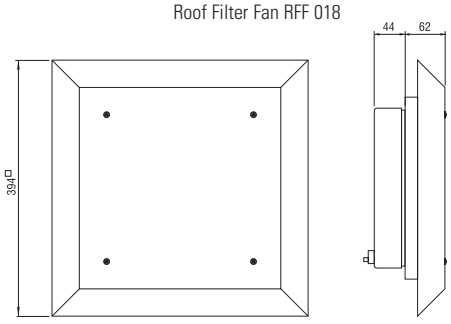

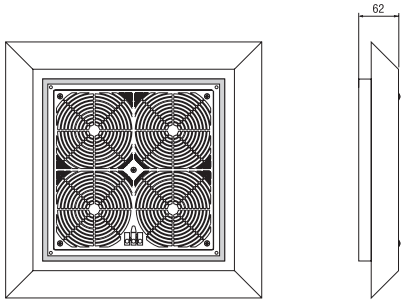

View from below

Roof Exit Filter
REF 118

Important note: For reasons of pressure compensation the roof filter fan must always be operated in combination with another filter fan (e.g. Art. No. 01803.0-00) or a passive intake filter (e.g. Art. No. 11803.0-00).

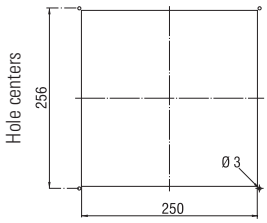

Enclosure cut-out

Roof Filter Fan RFF 018 Series

Art. No.	Operating voltage	Air volume, free flow	Air volume, free flow	Current consumption	Power consumption	Average noise level (DIN EN ISO 4871)	Depth in enclosure	Enclosure cut-out	Weight (approx.)
01850.0-00	230VAC, 50Hz	350m³/h (w/ filter mat G3)	500m³/h (w/o filter mat)	400mA	60W	55db (A)	44mm	250 x 250mm + 0.4	4.40kg
01851.0-00	120VAC, 60Hz	402m³/h (w/ filter mat G3)	575m³/h (w/o filter mat)	700mA	60W	55db (A)	44mm	250 x 250mm + 0.4	4.40kg

Roof Exit Filter REF 118 Series

Art. No.	Depth in enclosure	Enclosure cut-out	Weight (approx.)	Filter mat	Protection type
11850.0-00	none	250 x 250mm + 0.4	2.00kg	G3 acc. to DIN EN 779, filtering degree 85%	IP43 (w/ filter mat)

Filter Mats FM 086

Filter mat	282 x 282 mm
(1 packing unit = 3 pcs.)	Art. No. 08613.0-00

High-performance 19" Fan Tray LE 019 Series



- **High air output**
- **Long service life**
- **Ball bearing fans**
- **Ready for connection**
- **Optical function indicator**

Compact high performance fan tray for enforced circulation of air in switch and server enclosures and for concerted cooling of 19" component groups. Natural convection is improved and the formation of localised hot pockets is avoided. Also available with integrated thermostat (see photo).

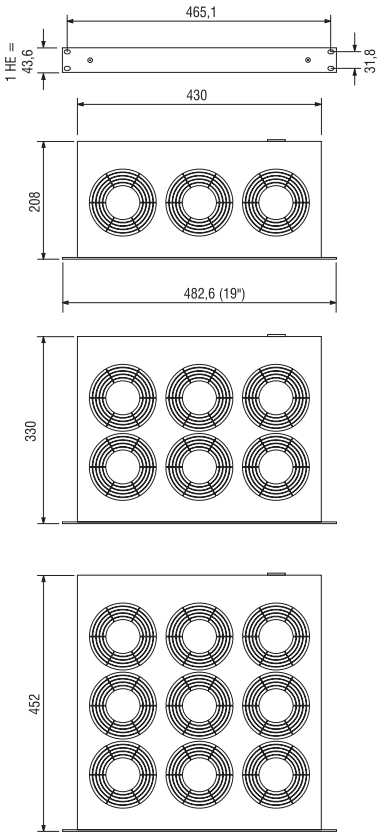

Technical Data

Axial fans, ball bearing	service life 50,000h at 25°C (65% RH)
	fan body aluminium, rotor plastic
Material	front panel aluminium, bright anodised
	casing steel sheet, electrogalvanized
Optical indicator	integrated in front panel
Connection	appliance power inlet on rear of casing, plug included
Fitting position	horizontal (direction of air upwards)
Operating / Storage temperature	-45 to +70°C (-49 to +158°F)
Protection type	IP20
Protection class	I (earthed)
Approvals	UL File No. E234324

Note

We recommend using the fan tray without integrated thermostat in combination with our dual thermostat (ZR 011 Art. No. 01176.0-00) for regulating temperature in electronic enclosures and for protection against overheating due to possible fan failure. The dual thermostat regulates the operation of the fan tray and – when connected to a signal device – also triggers an early warning if the enclosure interior temperature rises above a set limit.

When using a fan tray with integrated thermostat, the use of an additional thermostat (KTS 011 Art. No. 01141.0-00) provides the extra safety of activating a signal device.

Art. No.	Model	No. of fans	Operating voltage	Air flow, free flow	Current consumption	Average noise level (DIN EN ISO 4871)	Speed (rpm^{-1})	Impact pressure	Weight (approx.)
01930.0-00	without thermostat	3	230VAC, 50Hz	486m³/h	45W	55 db (A)	2600 min^{-1} (50Hz)	74Pa	3.00kg
01930.1-00	with thermostat 0 to +60°C	3	230VAC, 50Hz	486m³/h	45W	55 db (A)	2600 min^{-1} (50Hz)	74Pa	3.40kg
01940.0-00	without thermostat	6	230VAC, 50Hz	972m³/h	90W	57 db (A)	2600 min^{-1} (50Hz)	74Pa	5.30kg
01940.1-00	with thermostat 0 to +60°C	6	230VAC, 50Hz	972m³/h	90W	57 db (A)	2600 min^{-1} (50Hz)	74Pa	5.70kg
01950.0-00	without thermostat	9	230VAC, 50Hz	1458m³/h	135W	58 db (A	2600 min^{-1} (50Hz)	74Pa	7.80kg
01950.1-00	with thermostat 0 to +60°C	9	230VAC, 50Hz	1458m³/h	135W	58 db (A)	2600 min^{-1} (50Hz)	74Pa	7.90kg
01931.0-00	without thermostat	3	120VAC, 60Hz	576m³/h	45W	55 db (A)	2900 min^{-1} (60Hz)	88Pa	3.00kg
01931.1-00	with thermostat 0 to +60°C	3	120VAC, 60Hz	576m³/h	45W	55 db (A)	2900 min^{-1} (60Hz)	88Pa	3.40kg
01941.0-00	without thermostat	6	120VAC, 60Hz	1152m³/h	90W	57 db (A)	2900 min^{-1} (60Hz)	88Pa	5.30kg
01941.1-00	with thermostat 0 to +60°C	6	120VAC, 60Hz	1152m³/h	90W	57 db (A)	2900 min^{-1} (60Hz)	88Pa	5.70kg
01951.0-00	without thermostat	9	120VAC, 60Hz	1728m³/h	135W	58 db (A	2900 min^{-1} (60Hz)	88Pa	7.80kg
01951.1-00	with thermostat 0 to +60°C	9	120VAC, 60Hz	1728m³/h	135W	58 db (A)	2900 min^{-1} (60Hz)	88Pa	7.90kg

Airflow Monitor LC 013 / LCF 013 for higher reliability



Mechanical switch contact
Versatile fields of application
Small size
Easy to connect

The airflow monitor (NC/NO) is designed to indicate the loss of air movement of a fan or filter fan. The contact detects the loss of air movement caused by fan failure or blocked filter media regardless of direction of air. Its simple mechanical operation makes it a viable alternative to electronic monitoring systems.

Application:
The LC 013 is used as a signal contact to monitor fans or filter fans in stationary, self-contained Protection Class I enclosures. It can be connected to monitoring systems with remote control or can directly switch alarm devices, such as LED's or signal lamps. Loads with capacities exceeding the indicated switching capacity must be switched via a relay, e.g. our electronic relay SM 010. The airflow monitor with NC contact closes upon loss of air movement, i.e. it indicates fan failure (e.g. red signal lamp). The NO contact closes when fan is in operation and serves as optical function display (e.g. green signal lamp).

Technical Data

Contact type	reed / magnet contact
Normally Closed (NC)	switch contact open when air is flowing
Normally Open (NO)	switch contact closed when air is flowing
Max. switching voltage	NC: 240VDC (UL), 240V AC/DC (VDE) / NO: 60VDC
Max. switching current	NC: DC 500mA / NO: DC 170mA
Max. switching capacity	10W (resistive load)
Switching threshold of airflow velocity	> 2.5m/s (hysteresis: > 1m/s)
Max. airflow velocity	50m/s
Contact resistance	< 370mΩ (with wire)
Max. air humidity	70% RH (not precipitating)
Service life	> 100,000 cycles
Connection	2 x single strand AWG 26, length 500 mm, tip of stranded
	wire 5mm stripped and tinned (NC: black, NO: blue)
Mounting	alternatively integrated in protective grille (see table),
	mounting clamp or mounting clip
Casing	plastic according to UL94-HB, black
Fitting position	bidirectional tab perpendicular to airflow
Operating / Storage temperature	-20 to +50°C (-4 to +122°F) / -20 to +80°C (-4 to +176°F)
Protection type	IP20
Approvals	VDE + UL File No. E250507

Note: The product of switching voltage and switching current must not exceed 10W. The max. voltage and max. current must not be exceeded, not even short-term (voltage/current peaks). The resulting voltage and current peaks of inductive or capacitive loads must be restricted by a contact protection circuit.

Airflow monitor integrated in protective grille

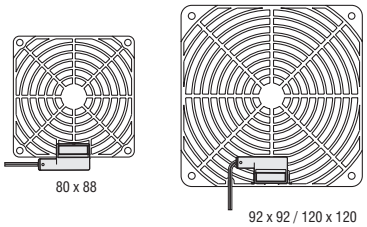

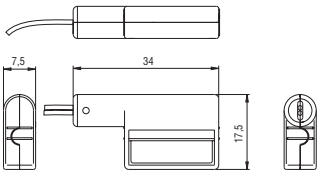

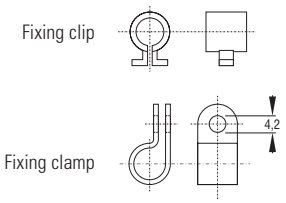

Connection example

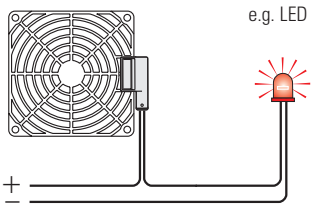

Installation notes:
1. The airflow monitor must not be installed in the impact range of permanent magnets or ferrous metals as the built-in permanent magnet will move unintentionally and consequently can not move in dependence with the air flow.
2. A suitable distance from electromagnetic fields, e.g. generated by transformers, motors, etc., must be maintained as otherwise the contact may switch incorrectly with the frequency of the power supply. Interferences must be checked with an oscillograph and the mounting position of the airflow monitor should be adjusted if necessary.
3. Avoid installing the airflow monitors in areas where air pockets or turbulence can be expected.
4. Ambient air with a high dust content should be avoided.
As there are many different conditions of use, suitability of this product must be assessed by the end user in its final application.

Description	Art. No. (NC)	Art. No. (NO)	Dimensions	Weight (approx.)
Airflow monitor with mounting clamp and mounting clip LC 013	01300.0-00	01300.1-00	34 x 17.5 x 7.5mm	5g
Airflow monitor integrated in protective grille (plastic) LCF 013	01301.0-00	01301.1-00	80 x 88 x 10.5mm	20g
	01302.0-00	01302.1-00	92 x 92 x 10mm	20g
	01303.0-00	01303.1-00	120 x 120 x 10mm	30g

Electronic Relay SM 010 (24VDC + 48VDC)



- **High DC switching capacity**
- **Variety of applications**
- **Compact design**
- **Simple connection**
- **Clip fixing**

Electronic relay for switching DC appliances with high switching capacity. A separate conventional switch contact is used as controller (e.g. temperature regulator, humidity regulator). The electronic relay is available in 24VDC and 48VDC versions.

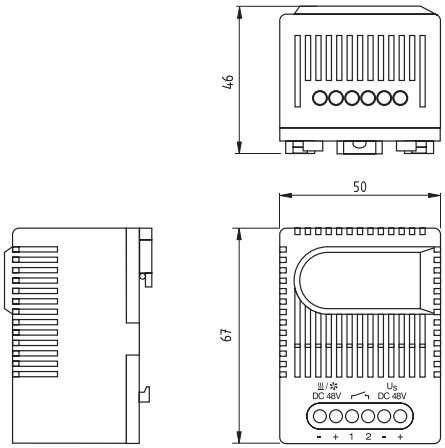

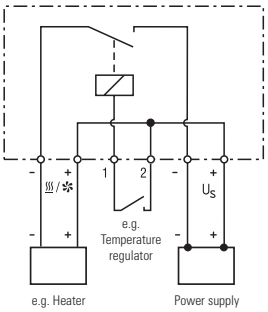

CE RoHS 2002/95/EC compliant

Technical Data

Contact type	contact maker, normally open (Relay/MOSFET)
Contact resistance	< 10mΩ
Service life	> 100,000 cycles
EMC	acc. to EN 55014-1-2, EN 61000-3-2, EN 61000-3-3
Connection	6-pole terminal, clamping torque 0.5Nm max.:
	rigid wire 2.5mm²
	stranded wire (with wire end ferrule) 1.5mm²
Mounting	clip for 35mm DIN rail, EN50022
Casing	plastic according to UL94 V-0, light grey
Dimensions	67 x 50 x 46mm
Weight	approx. 85g
Fitting position	variable
Operating / Storage temperature	-45 to +70°C (-49 to +158°F)
Protection type	IP20
Approvals	VDE submitted

Load, e.g. heater, cooling device with temperature cut-out

SM 010 Electronic relay

Control contact, e.g. temperature, humidity or pressure regulator

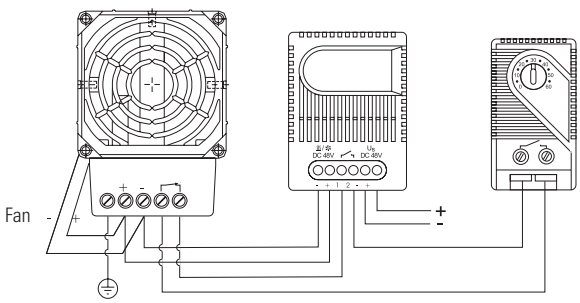

Load, e.g. heater, cooling device without temperature cut-out

SM 010 Electronic relay

Control contact, e.g. temperature, humidity or pressure regulator

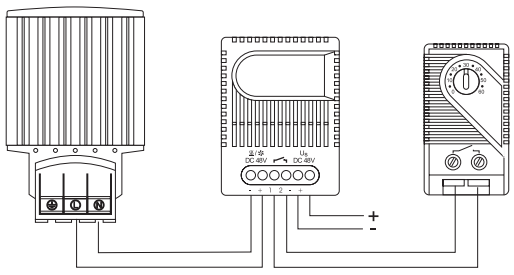

Art. No.	Operating voltage	Max. Switching capacity
01001.0-00	24VDC (20-28VDC)	28VDC 16A
01000.0-00	48VDC (38-56VDC)	56VDC 16A

Small, compact Thermostat KTO 011 / KTS 011



- **Large setting range**
- **Small size**
- **Simple to mount**
- **High switching performance**

KTO 011: Thermostat (normally closed); contact breaker for regulating heaters.

KTS 011: Thermostat (normally open); contact maker for regulating of filter fans and heat exchangers or for switching signal devised when temperature limit has been exceeded.

CE RoHS 2002/95/EC compliant

Technical Data

Switch temperature difference	7K (± 4K tolerance)
Sensor element	thermostatic bimetal
Contact type	snap-action contact
Contact resistance	< 10mΩ
Service life	> 100,000 cycles
Max. Switching capacity	250VAC, 10 (2) A
	120VAC, 15 (2) A
	DC 30W
EMC	acc. to EN 55014-1-2, EN 61000-3-2, EN 61000-3-3
Connection	2-pole terminal, clamping torque 0.5Nm max.:
	rigid wire 2.5mm²
	stranded wire (with wire end ferrule) 1.5mm²
Mounting	clip for 35mm DIN rail, EN50022
	(or for exit filter EF 118 Series)
Casing	plastic according to UL94 V-0, light grey
Dimensions	60 x 33 x 43mm
Weight	approx. 40g
Fitting position	variable
Operating / Storage temperature	-45 to +80°C (-49 to +176°F)
Protection type	IP20

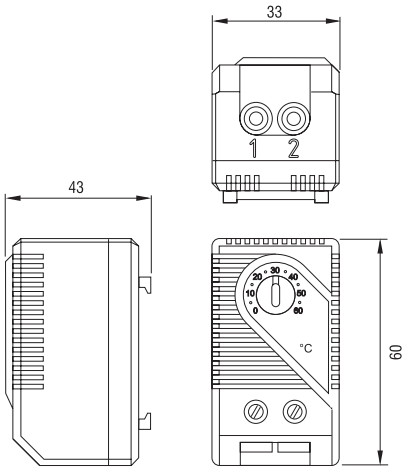

Thermostat KTO 011 (NC) | Thermostat KTS 011 (NO)

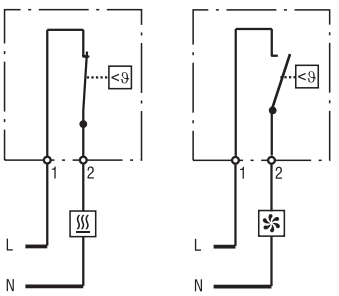

Example of connection

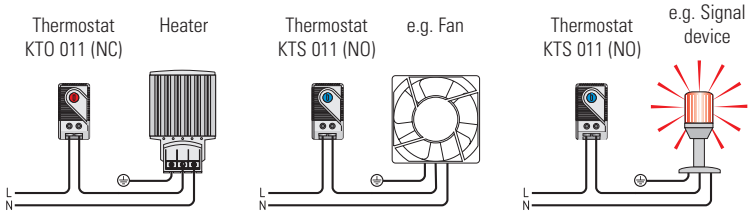

Example of connection

Setting range	Art. No. Contact Breaker (NC)	Art. No. Contact Maker (NO)	Approvals
0 to +60°C	01140.0-00	01141.0-00	VDE
-10 to +50°C	01142.0-00	01143.0-00	VDE
+20 to +80°C	01159.0-00	01158.0-00	VDE
+32 to +140°F	01140.9-00	01141.9-00	UL File No. E164102
+14 to +122°F	01142.9-00	01143.9-00	UL File No. E164102
0 to +60°C	01146.9-00	01147.9-00	UL File No. E164102

- **Small size**
- **Default temperature settings**
- **Easy to install**
- **High switching tolerance**

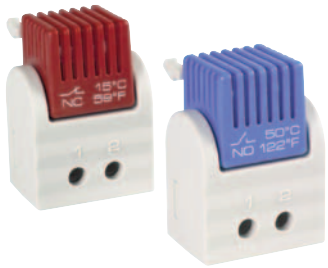

Tamperproof (Pre-set) Thermostat FTO 011

Contact breaker / NC (red casing) for regulating heaters or for switching signal devices when temperature has fallen below the minimum value. The contact opens when temperature is rising.

Tamperproof (Pre-set) Thermostat FTS 011

Contact maker / NO (blue casing) for regulating filter fans, heat exchangers, cooling devices or for switching signal devices when temperature limit has been exceeded. The contact closes when temperaure is rising.

Technical Data

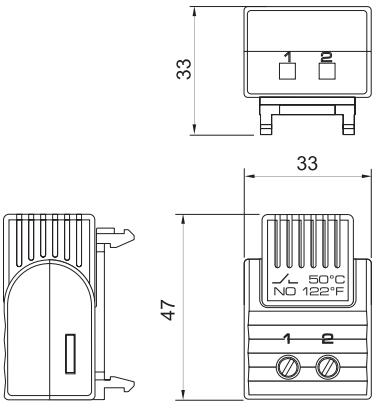

Sensor element	thermostatic bimetal
Contact type	snap-action contact
Contact resistance	< 20mΩ
Service life	> 100,000 cycles
Max. switching capacity	250V AC, 5 (1.6)A
	120V AC, 10 (2)A
	DC 30W
Max. inrush current	AC 10A
EMC	acc. to EN 55014-1-2, EN 61000-3-2, EN 61000-3-3
Connection	2-pole terminal for 2.5mm², torque 0.8Nm max.
Mounting	clip for 35mm DIN rail, EN 50022
Casing	plastic according to UL94 V-0, light grey
Dimensions	47 x 33 x 33mm
Weight	approx. 23g
Fitting position	variable
Operating/Storage temperature	-20 to +80°C (-4 to +176°F) / -45 to +80°C (-49 to +176°F)
Prot. type	IP20
Approvals	VDE + UL File No. E164102

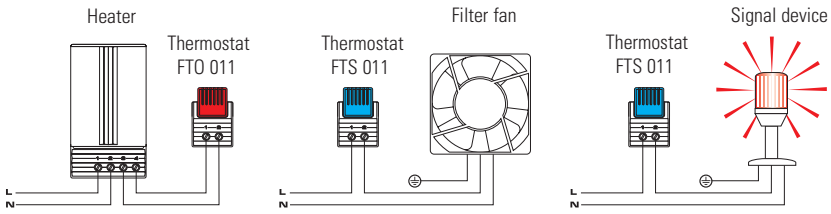

Example of connection

Art. No.	Contact	Switch-off temperature	Switch-on temperature
01160.0-00	Contact breaker (NC)	+15°C / +59°F (± 5K tolerance)	+5°C / +41°F (± 5K tolerance)
01160.0-01	Contact breaker (NC)	+25°C / +77°F (± 5K tolerance)	+15°C / +59°F (± 5K tolerance)
		Switch-on temperature	**Switch-off temperature**
01161.0-00	Contact maker (NO)	+50°C / +122°F (± 6K tolerance)	+40°C / +104°F (± 7K tolerance)
01161.0-01	Contact maker (NO)	+60°C / +140°F (± 6K tolerance)	+50°C / +122°F (± 7K tolerance)
01161.0-02	Contact maker (NO)	+35°C / +95°F (± 6K tolerance)	+25°C / +77°F (± 7K tolerance)

Dual Thermostat ZR 011



- **NO and NC in one casing**
- **Separate adjustable temperatures**
- **High switching capacity**
- **Terminals easily accessible**
- **Clip fixing**

Two thermostats in one casing:
Thermostat (contact breaker, normally closed) for regulating heaters.
Thermostat (contact maker, normally open) for regulating filter fans and heat exchangers or switching signal devices when temperature limit has been exceeded.

Heaters and cooling equipment can be switched independently from each other with a temperature offset as opposed to the usual change-over contacts.

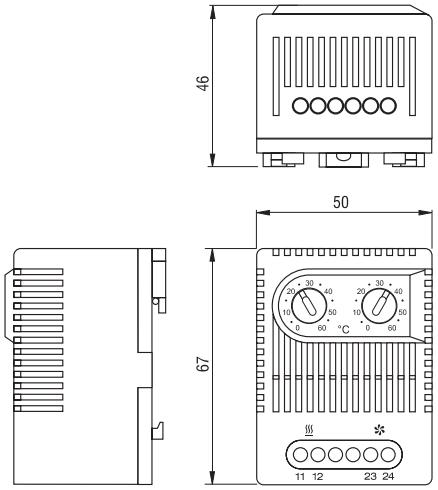

Thermostat
ZR 011 (NC/NO)

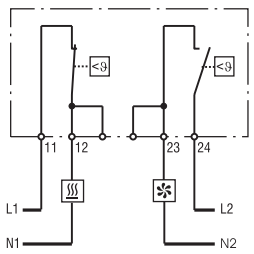

Example of connection

Heater

Filter fan, Cooling equipment, Signal device

Technical Data

Switch temperature difference	7K (± 4K tolerance)
Sensor element	thermostatic bimetal
Contact type	snap-action contact
Contact resistance	< 10mΩ
Service life	> 100,000 cycles
Max. Switching capacity	250VAC, 10 (2) A
	120VAC, 15 (2) A
	DC 30W
EMC	acc. to EN 55014-1-2, EN 61000-3-2, EN 61000-3-3
Connection	4-pole terminal, clamping torque 0.5Nm max.:
	rigid wire 2.5mm²
	stranded wire (with wire end ferrule) 1.5mm²
Mounting	clip for 35mm DIN rail, EN50022
Casing	plastic according to UL94 V-0, light grey
Dimensions	67 x 50 x 46mm
Weight	approx. 90g
Fitting position	variable
Operating / Storage temperature	-45 to +80°C (-49 to +176°F)
Protection type	IP20
Approvals	UL File No. E164102

Art. No.	Setting Range		Setting Range	
01172.0-00	contact breaker, normally closed	0 to +60°C	contact maker, normally open	0 to +60°C
01172.0-01	contact breaker, normally closed	+32 to +140°F	contact maker, normally open	+32 to +140°F
01175.0-00	contact breaker, normally closed	-10 to +50°C	contact maker, normally open	+20 to +80°C
01175.0-01	contact breaker, normally closed	+14 to +122°F	contact maker, normally open	+68 to +176°F
01176.0-00*	contact maker, normally open	0 to +60°C	contact maker, normally open	0 to +60°C
01176.0-01*	contact maker, normally open	+32 to +140°F	contact maker, normally open	+32 to +140°F

*For regulating heat exchangers and fans (e.g. LE 019) and as an alarm contact for monitoring the interior temperature of electronic enclosures.

Tamperproof Dual-Thermostat (Pre-set) FTD 011



NO and NC in one casing
Default temperature settings
High switching accuracy
Clip fixing

Two thermostats in one casing:
Tamperproof (Pre-set) Thermostat/Contact breaker (NC) for regulating heaters or for switching signal devices when temperature has fallen below the minimum value. The contact opens when temperature is rising.
Tamperproof (Pre-set) Thermostat/Contact maker (NO) for regulating filter fans, heat exchangers or for switching signal devices when temperature limit has been exceeded. The contact closes when temperaure is rising.

Heaters and cooling equipment can be switched independently from each other with a temperature offset as opposed to the usual change-over contacts.

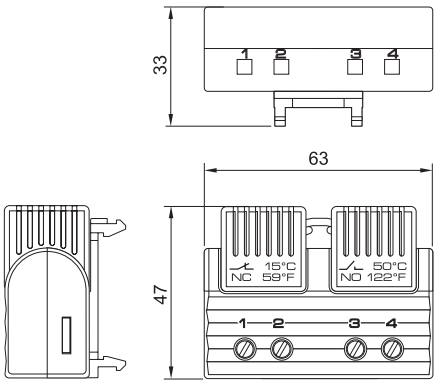

Technical Data

Sensor element	thermostatic bimetal
Contact type	snap-action contact
Contact resistance	< 20mΩ
Service life	> 100,000 cycles
Max. switching capacity	250V AC, 5 (1.6)A
	120V AC, 10 (2)A
	DC 30W
Max. inrush current	AC 10A
EMC	acc. to EN 55014-1-2, EN 61000-3-2, EN 61000-3-3
Connection	4-pole terminal for 2.5mm², torque 0.8Nm max.
Mounting	clip for 35mm DIN rail, EN 50022
Casing	plastic according to UL94 V-0, light grey
Dimensions	47 x 63 x 33mm
Weight	approx. 40g
Fitting position	variable
Operating/Storage temperaure	-20 to + 80°C (-4 to +176°F) / -45 to + 80°C (-49 to +176°F)
Prot. type	IP20
Approvals	VDE + UL File No. E164102

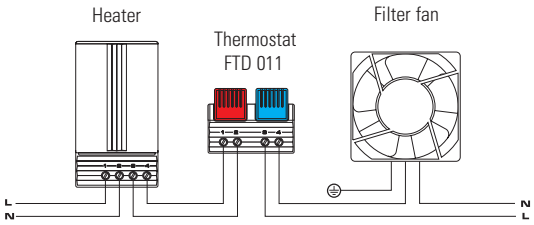

Example of connection

Art. No.	Contact breaker (NC)		Contact maker (NO)	
	Switch-off temperature	Switch-on temperature	Switch-on temperature	Switch-off temperature
01163.0-00	+15°C / +59°F (± 5K tolerance)	+5°C / +41°F (± 5K tolerance)	+50°C / +122°F (± 6K tolerance)	+40°C / +104°F (± 7K tolerance)
01163.0-01	+25°C / +77°F (± 5K tolerance)	+15°C / +59°F (± 5K tolerance)	+60°C / +140°F (± 6K tolerance)	+50°C / +122°F (± 7K tolerance)
01163.0-02	+15°C / +59°F (± 5K tolerance)	+5°C / +41°F (± 5K tolerance)	+35°C / +95°F (± 6K tolerance)	+25°C / +77°F (± 7K tolerance)
01163.0-03	+25°C / +77°F (± 5K tolerance)	+15°C / +59°F (± 5K tolerance)	+50°C / +122°F (± 6K tolerance)	+40°C / +104°F (± 7K tolerance)

Art. No.	Contact maker (NO)		Contact maker (NO)	
	Switch-on temperature	Switch-off temperature	Switch-on temperature	Switch-off temperature
01164.0-00	+50°C / +122°F (± 6K tolerance)	+40°C / +104°F (± 7K tolerance)	+60°C / +140°F (± 6K tolerance)	+50°C / +122°F (± 7K tolerance)

Mechanical Thermostat FZK 011



- **Adjustable temperature**
- **High switching capacity**
- **Small hysteresis**
- **Terminals easily accessible**
- **Clip fixing**
- **Change-over contact**

The mechanical thermostat is used for controlling heating and cooling equipment, filter fans or signal devices. The thermostat registers the surrounding air and can switch both inductive and resistive loads via snap-action contact.

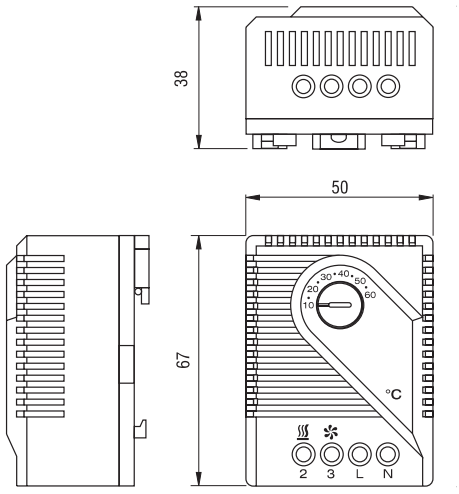

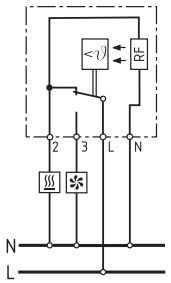

Enclosure heater

Filter fan, Cooling equipment, Signal device

Technical Data

Switch temperature difference	4K (± 1.5K tolerance)*
Sensor element	thermostatic bimetal
Contact type	change-over snap-action contact
Contact resistance	< 10mΩ
Service life	> 100,000 cycles
Max. Switching capacity, NC	250VAC, 10 (4) A
	120VAC, 10 (4) A
	DC 30W
Max. Switching capacity, NO	250VAC, 5 (2) A
	120VAC, 5 (2) A
	DC 30W
EMC	acc. to EN 55014-1-2, EN 61000-3-2, EN 61000-3-3
Connection	4-pole terminal, clamping torque 0.5Nm max.:
	rigid wire 2.5mm²
	stranded wire (with wire end ferrule) 1.5mm²
Mounting	clip for 35mm DIN rail, EN50022
Casing	plastic according to UL94 V-0, light grey
Dimensions	67 x 50 x 38mm
Weight	approx. 0.10kg
Fitting position	variable
Operating / Storage temperature	-20 to +80°C (-4 to +176°F) / -45 to +80°C (-49 to +176°F)
Protection type	IP20
Approvals	UL File No. E164102

*Connecting terminal "N" (RF heating resistor) causes the thermal feedback to work and so reduces the switch temperature difference to approx. 0.5K.

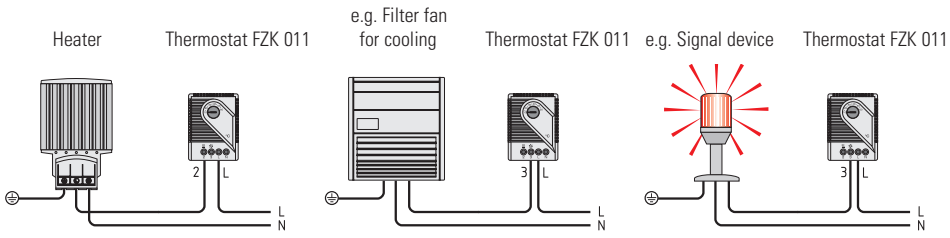

Examples of connection

Art. No.	Operating voltage	Setting range
01170.0-00	230VAC	+5 to +60°C
01170.0-01	230VAC	+40 to +140°F
01170.0-02	230VAC	-20 to +30°C
01170.9-00	120VAC	+40 to +140°F
01170.9-01	120VAC	+5 to +60°C



- **High DC breaking capacity**
- **Low hysteresis**
- **Adjustable temperature**
- **Change-over contact**
- **Clip fixing**

Electronic thermostat for regulating high performance DC 24V equipment. Heating or cooling appliances as well as signal devices can be switched via the potential free change-over contact. In comparison to mechanical thermostats, the ET 011 has a low hysteresis making the switching point and setting accuracy more precise.

CE RoHS 2002/95/EC compliant

Technical Data

Switch temperature difference	approx. 3K
Sensor element	PTC
Contact type	change-over
Contact resistance	< 10mΩ
Service life	> 100,000 cycles
Max. switching capacity	28VDC, 16A
EMC	acc. to EN 55014-1-2, EN 61000-3-2, EN 61000-3-3
Connection	5-pole terminal, clamping torque 0.5Nm max.:
	rigid wire 2.5mm²
	stranded wire (with wire end ferrule) 1.5mm²
Mounting	clip for 35mm DIN rail, EN 50022
Casing	plastic according to UL94 V-0, light grey
Dimensions	67 x 50 x 46mm
Weight	approx. 80g
Fitting position	vertical
Operating / Storage temperature	0 to +60°C (32 to +140°F) / -45 to +80°C (-49 to +176°F)
Protection type	IP20
Approvals	-

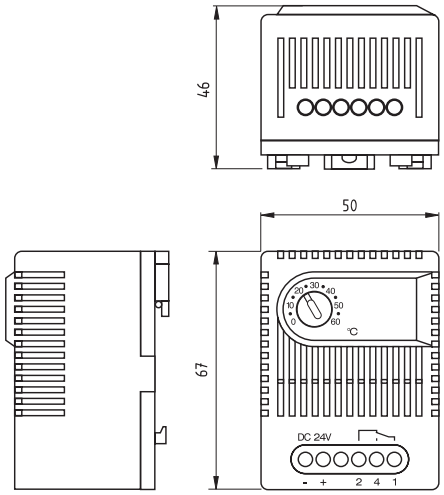

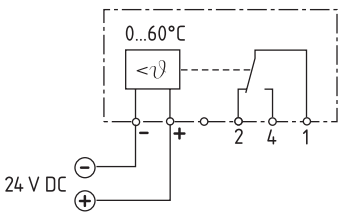

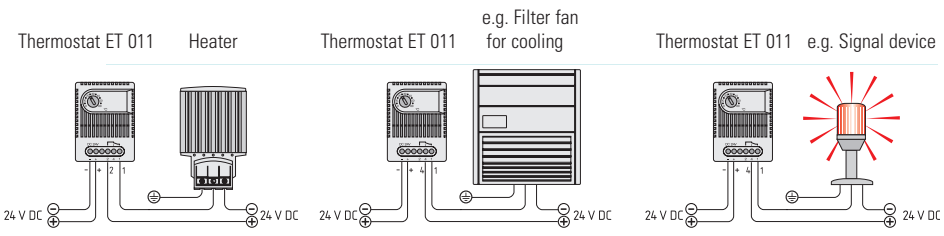

Examples of connection

Art. No.	Operating voltage	Setting range
01190.0-00	24VDC (20-28VDC)	0 to +60°C

Mechanical Hygrostat MFR 012



- Adjustable relative humidity
- Change-over contact
- High switching capacity
- Easily accessible terminals
- Clip fixing

The electromechanical hygrostat MRF 012 is designed to control enclosure heaters so that the dew point is raised when a critical relative humidity of 65% is exceeded. In this way condensation and corrosion is effectively prevented.

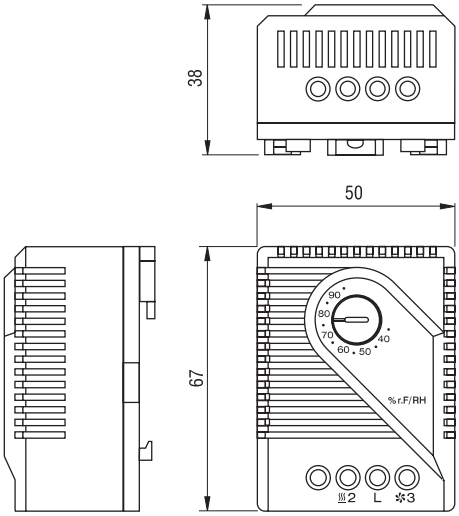

Technical Data

Switch difference*	4% RH (± 3% tolerance)
Permissible air velocity	15m/sec
Contact type	change-over contact
Contact resistance	< 10mΩ
Service life	> 100,000 cycles
Min. Switching capacity	20V AC/DC, 100mA
Max. Switching capacity	250VAC, 5 (1) A
	DC 20W
EMC	acc. to EN 55014-1-2, EN 61000-3-2, EN 61000-3-3
Connection	3-pole terminal for 2.5mm², clamping torque 0.5Nm max.:
	rigid wire 2.5mm²
	stranded wire (with wire end ferrule) 1.5mm²
Mounting	clip for 35mm DIN rail, EN50022
Casing	plastic according to UL94 V-0, light grey
Dimensions	67 x 50 x 38mm
Weight	approx. 60g
Fitting position	variable
Operating / Storage temperature	0 to +60°C (+32 to +140°F) / -20 to +80°C (-4 to +176°F)
Protection type	IP20
Approvals	UL File No. E164102

*at 50% RH

Connection diagram

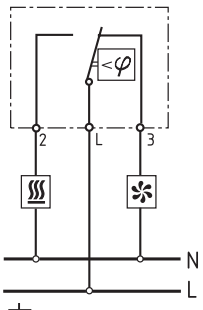

Enclosure heater

Filter fan, Cooling equipment, Signal device

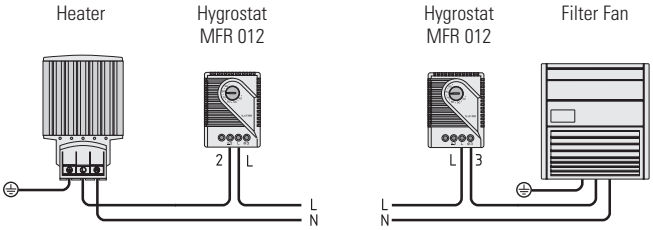

Example of connection

Art. No.	Setting range
01220.0-00	35 to 95% RH



- **Adjustable and pre-set relative humidity**
- **Optical operating display (LED)**
- **High switching capacity**
- **Clip fixing**
- **Temperature-compensated**

The electronic hygrostat senses the relative humidity in an enclosure with electric/electronic components, and turns on a heater at the set point, helping prevent the formation of condensation in the enclosure. The LED integrated in the adjustment knob is lit when the connected heater is in operation.

CE RoHS 2002/95/EC compliant

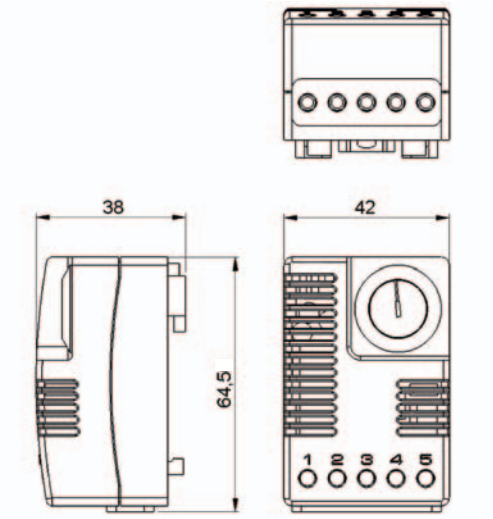

Technical Data

Switch difference	5% RH (± 1% RH tolerance) at 25°C/77°F (50% RH)
Reaction time	approx. 5 sec.
Contact type	change-over contact (relay)
Service life	> 50,000 cycles
Max. switching capacity (relay	240VAC, 8 (1.6) A
output)	120VAC, 8 (1.6) A
	24VDC, 4A
EMC	acc. to EN 55014-1-2, EN 61000-3-2, EN 61000-3-3
Optical indicator	LED
Connection	5-pole terminal, clamping torque 0.5Nm max.:
	rigid wire 2.5mm²
	stranded wire (with wire end ferrule) 1.5mm²
Mounting	clip for 35mm DIN rail, EN50022
Casing	plastic according to UL94 V-0, light grey
Dimensions	64.5 x 42 x 38mm
Weight	approx. 70g
Fitting position	vertical
Operating / Storage temperature	0 to +60°C (+32 to +140°F) / -20 to +70°C (-4 to +158°F)
Max. storage humidity	90% RH (without condensation)
Protection type	IP20

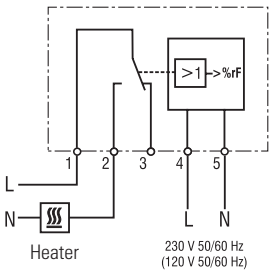

Connection diagram

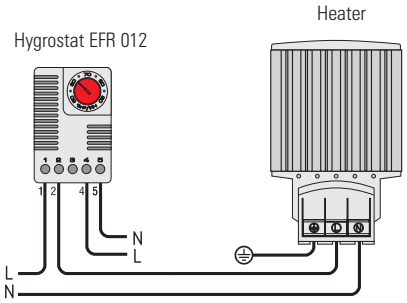

Example of connection

Art. No.	Operating voltage	Setting range	Approval
01245.0-00	230VAC, 50/60Hz	40 to 90% RH	VDE + UL intended
01246.0-00	230VAC, 50/60Hz	65% RH pre-set	VDE + UL intended
01245.9-00	120VAC, 50/60Hz	40 to 90% RH	UL intended
01246.9-00	120VAC, 50/60Hz	65% RH pre-set	UL intended

Electronic Hygrotherm ETF 012



Temperature and humidity adjustable
Optical operating display (LED)
High switching capacity
Clip fixing

The electronic hygrotherm senses the ambient temperature and relative humidity in an enclosure with electric/electronic components, and turns on a heater (or alternatively, a fan) at either set point, helping prevent the formation of condensation in the enclosure. The LED integrated in the adjustment knob on the active controller is lit when the connected device is in operation.

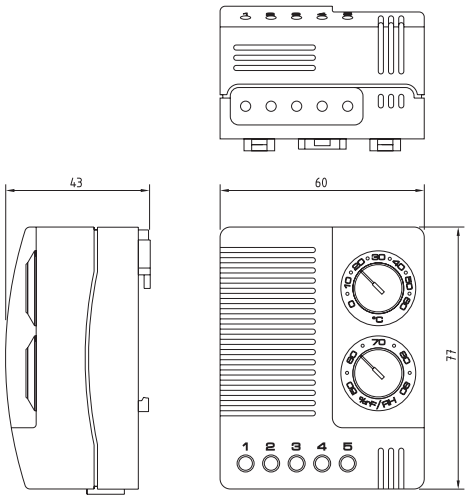

Technical Data

Switch difference (temperature)	2K (± 1K tolerance) at 25°C/77°F (50% RH)
Switch difference (humidity)	4% RH (± 1% tolerance) at 25°C/77°F (50% RH)
Reaction time (humidity)	approx. 5 sec.
Contact type	change-over contact (relay)
Contact resistance	< 10mΩ
Service life	NC: > 50,000 cycles
	NO: > 100,000 cycles
Max. Switching capacity (Relay	NC: 240VAC, 6 (1) A
output)	NO: 240VAC, 8 (1.6) A
	NC: 120VAC, 6 (1) A
	NO: 120VAC, 8 (1.6) A
	24VDC, 4A
EMC	acc. to EN 55014-1-2, EN 61000-3-2, EN 61000-3-3
Optical indicator	LED
Connection	5-pole terminal, clamping torque 0.5Nm max.:
	rigid wire 2.5mm²
	stranded wire (with wire end ferrule) 1.5mm²
Mounting	clip for 35mm DIN rail, EN50022
Casing	plastic according to UL94 V-0, light grey
Dimensions	77 x 60 x 43mm
Weight	approx. 0.20kg
Fitting position	vertical
Operating / Storage temperature	0 to +60°C (+32 to +140°F) / -20 to +80°C (-4 to +176°F)
Protection type	IP20

Connection diagram

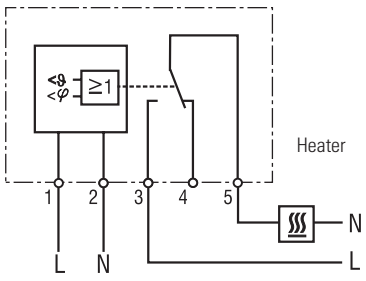

Example of connection

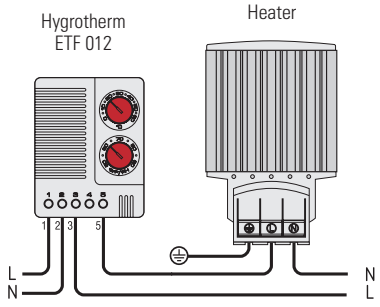

Art. No.	Operating voltage	Setting range temperature	Setting range humidity	Approval
01230.0-00	230VAC, 50/60Hz	0 to +60°C	50 to 90% RH	VDE + UL File No. E164102
01230.9-00	120VAC, 50/60Hz	+32 to +140°F	50 to 90% RH	UL File No. E164102
01230.9-01	120VAC, 50/60Hz	0 to +60°C	50 to 90% RH	UL File No. E164102

Hazardous area Thermostat REx 011 Series 15°C, 25°C



- **Compact design**
- **Set temperature**
- **High switching capacity**

Compact small mechanical thermostat for temperature regulation and monitoring of heaters, for example in transmitter cabinets, control panels and measuring equipment which are deployed in areas with explosion hazard. The special switch construction enables high response accuracy, small switch temperature difference and a very long service life. High switching performance allows direct control of the heaters.

Technical Data

Explosion proof according to EN	LCIE (Laboratoire Central des Industries Electriques)
Conformity certificate	01 ATEX 6074/02, LCIE N° 06 ATEX Q8011, IECEx LCI 07. 0021
Sensor element	thermostatic bimetal
Contact type (1-pole)	opens with rising temperature
Service life	> 100,000 cycles
Max. Switching capacity	250VAC, 4 (1) A
Connection	Si HF - JZ 3 x 0.75mm², length 1m
Mounting	mounting bracket with nut M8 (see illustration)
Casing	aluminium, black anodised
Dimensions	length 110mm
Weight	approx. 0.20kg
Fitting position	variable
Operating / Storage temperature	-20 to +40°C (-4 to +104°F) / -45 to +70°C (-49 to +158°F)
Protection type / Protection class	IP65 / I (earthed)

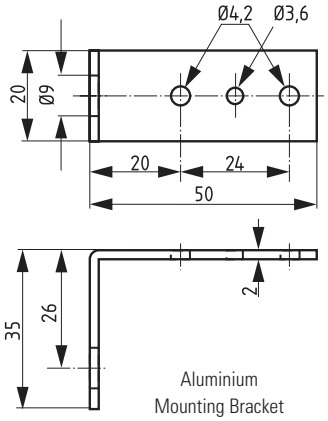

Aluminium
Mounting Bracket

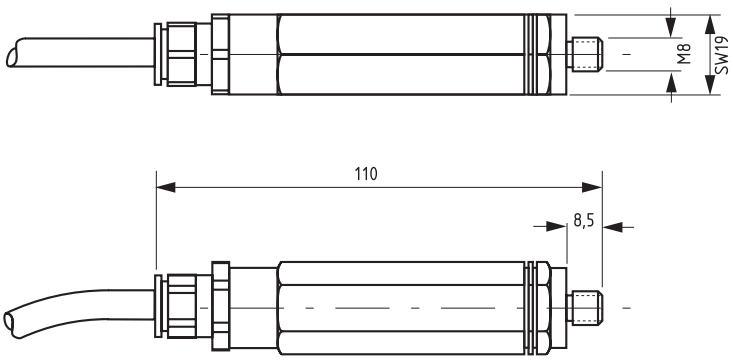

Art. No.	Ex protection type	Switch-off temperature	Switch temperature difference
01180.0-00	d IIC T6 - Ex tD A21 IP6X T85°C	+15°C (± 4K tolerance)	4K (± 1K tolerance)
01181.0-00	d IIC T6 - Ex tD A21 IP6X T85°C	+25°C (± 4K tolerance)	4K (± 1K tolerance)

Slimline Lamp SL 025 Series with on/off switch



Photo: Slimline lamp with on/off switch, with integrated electric socket (Germanyy), Art. No. 02520.0-00

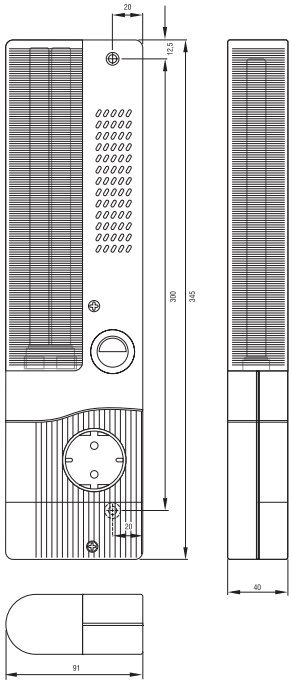

- **Slim casing**
- **Electronic ballast**
- **Lamp without/with electrical socket (choice of sockets)**
- **Magnet fixing (option)**
- **Energy saving lamp**
- **On/Off switch**

The flat slimline lamp SL 025 is suitable for all types of panels and enclosures, especially where space is at a premium. The lamp can be mounted on its narrow or broad surface using screws. It is also available with a magnet which allows it to be fitted quickly in any position in a steel enclosure. Both versions are available with an integrated electrical socket enabling the use of additional appliances.

CE RoHS 2002/95/EC compliant

Technical Data

Power consumption	11W (equals 75W light bulb)
Luminosity	900Lm
Lamp type	energy saving lamp, 2G7 socket
Service life	10,000h
Switch	on/off light switch
Connection	terminal 2.5mm² with cable clamp, torque 0.8Nm max.
Mounting	screw fixing, M5, 300mm centers
	magnet fixing (optional)
Casing	plastic according to UL94 V-0, light grey
Dimensions	345 x 91 x 40mm
Fitting position	narrow surface/broad surface
Operating / Storage temperature	-20 to +50°C (-4 to +122°F) / -45 to +70°C (-49 to +158°F)
Protection type	IP20
Note	The slimline lamp SL 025 is also available with a 19" front
	panel
	24VDC to 48VDC on request

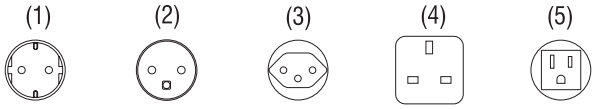

Art. No.	Model	Operating Voltage	Socket	Nominal Current	Weight (approx.)	Protection class	Approvals
02520.0-00	without magnet	230VAC, 50/60Hz	Germany/Russia (1)	16.0A	0.40kg	I (earthed)	VDE
02520.1-01	with magnet	230VAC, 50/60Hz	Germany/Russia (1)	16.0A	0.50kg	I (earthed)	VDE
02521.0-00	without magnet	230VAC, 50/60Hz	France/Poland (2)	16.0A	0.40kg	I (earthed)	VDE
02521.1-04	with magnet	230VAC, 50/60Hz	France/Poland (2)	16.0A	0.50kg	I (earthed)	VDE
02522.0-00	without magnet	230VAC, 50/60Hz	Switzerland (3)	10.0A	0.40kg	I (earthed)	VDE
02522.1-01	with magnet	230VAC, 50/60Hz	Switzerland (3)	10.0A	0.50kg	I (earthed)	VDE
02523.0-00	without magnet	230VAC, 50/60Hz	UK/Ireland (4)	13.0A	0.40kg	I (earthed)	VDE
02523.1-05	with magnet	230VAC, 50/60Hz	UK/Ireland (4)	13.0A	0.50kg	I (earthed)	VDE
02524.0-01	without magnet	120VAC, 50/60Hz	USA/Canada (5)	15.0A	0.40kg	I (earthed)	UL File No. E234324
02524.1-05	with magnet	120VAC, 50/60Hz	USA/Canada (5)	15.0A	0.50kg	I (earthed)	UL File No. E234324
02527.0-00	without magnet	230VAC, 50/60Hz	none	-	0.40kg	II (double insulated)	VDE + UL File No. E234324
02527.1-14	with magnet	230VAC, 50/60Hz	none	-	0.50kg	II (double insulated)	VDE
02527.0-10	without magnet	120VAC, 50/60Hz	none	-	0.40kg	II (double insulated)	UL File No. E234324
02527.1-11	with magnet	120VAC, 50/60Hz	none	-	0.50kg	II (double insulated)	UL File No. E234324



Photo: Slimline lamp with movement sensor and with integrated electric socket (Germany), Art. No. 02520.0-03

- **Slim casing**
- **Electronic ballast**
- **Lamp without/with electrical socket (choice of sockets)**
- **Magnet fixing (option)**
- **Energy saving lamp**
- **Automatic switching**

The flat slimline lamp SL 025 with movement sensor is suitable for all types of panels and enclosures, especially where space is at a premium. The lamp can be mounted on its narrow or broad surface using screws. It is also available with a magnet which allows it to be fitted quickly in any position in a steel enclosure. Both versions are available with an integrated electrical socket enabling the use of additional appliances. The movement sensor substitutes a door contact switch.

CE RoHS 2002/95/EC compliant

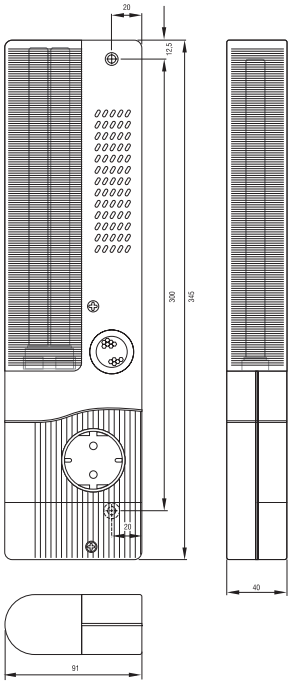

Technical Data

Power consumption	11W (equals 75W light bulb)
Luminosity	900Lm
Lamp type	energy saving lamp, 2G7 socket
Service life	10,000h
Switch	PIR movement sensor, approx. 6min. fixed switch-on duration
Connection	terminal 2.5mm² with cable clamp, torque 0.8Nm max.
Mounting	screw fixing, M5, 300mm centers
	magnet fixing (optional)
Casing	plastic according to UL94 V-0, light grey
Dimensions	345 x 91 x 40mm
Fitting position	narrow surface/broad surface
Operating / Storage temperature	-20 to +50°C (-4 to +122°F) / -45 to +70°C (-49 to +158°F)
Protection type	IP20
Note	The slimline lamp SL 025 is also available with a 19" front
	panel
	24VDC to 48VDC on request

The PIR movement sensor switches the lighting on when the enclosure door is opened. The switch-on time is reset with every further registered movement. The movement sensor does not react to movement on the other side of glass and so can be used in enclosures with glass doors.

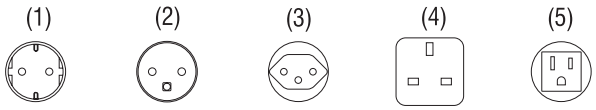

Art. No.	Model	Operating Voltage	Socket	Nominal Current	Weight (approx.)	Protection class	Approvals
02520.0-03	without magnet	230VAC, 50/60Hz	Germany/Russia (1)	16.0A	0.40kg	I (earthed)	VDE
02520.1-04	with magnet	230VAC, 50/60Hz	Germany/Russia (1)	16.0A	0.50kg	I (earthed)	VDE
02521.0-03	without magnet	230VAC, 50/60Hz	France/Poland (2)	16.0A	0.40kg	I (earthed)	VDE
02521.1-05	with magnet	230VAC, 50/60Hz	France/Poland (2)	16.0A	0.50kg	I (earthed)	VDE
02522.0-03	without magnet	230VAC, 50/60Hz	Switzerland (3)	10.0A	0.40kg	I (earthed)	VDE
02522.1-04	with magnet	230VAC, 50/60Hz	Switzerland (3)	10.0A	0.50kg	I (earthed)	VDE
02523.0-03	without magnet	230VAC, 50/60Hz	UK/Ireland (4)	13.0A	0.40kg	I (earthed)	VDE
02523.1-04	with magnet	230VAC, 50/60Hz	UK/Ireland (4)	13.0A	0.50kg	I (earthed)	VDE
02524.0-04	without magnet	120VAC, 50/60Hz	USA/Canada (5)	15.0A	0.40kg	I (earthed)	UL File No. E234324
02524.1-06	with magnet	120VAC, 50/60Hz	USA/Canada (5)	15.0A	0.50kg	I (earthed)	UL File No. E234324
02527.0-04	without magnet	230VAC, 50/60Hz	none	-	0.40kg	II (double insulated)	VDE + UL File No. E234324
02527.1-15	with magnet	230VAC, 50/60Hz	none	-	0.50kg	II (double insulated)	VDE
02527.0-12	without magnet	120VAC, 50/60Hz	none	-	0.40kg	II (double insulated)	UL File No. E234324
02527.1-17	with magnet	120VAC, 50/60Hz	none	-	0.50kg	II (double insulated)	UL File No. E234324

Dual Lamp DL 026 Series with on/off switch



Versatile – base lamp or hand lamp
Long-life energy saving lamp
Connections for further lamps

Dual lamp with on/off switch (incl. base station)

CE RoHS 2002/95/EC Compliant

Technical Data

Luminosity	1000Lm
Lamp type	energy saving lamp, E27 socket
Service life	10,000h
Switch	on/off push switch
Connection	6-pole screw connector 2.5mm² (torque 0.5Nm max.) for power
	connection, further lamps and external door contact switch
Mounting	screw fixing (e.g. 35mm DIN rail)
Casing	plastic according to UL94 V-0, light grey
Weight	approx. 0.60kg
Fitting position	variable
Operating / Storage temperature	-20 to +50°C (-4 to +122°F) / -45 to +70°C (-49 to +158°F)
Protection type / Protection class	IP20 / II (double insulated)
Approvals	-
Accessories	wall holder with connection cable (2m), hook and
	fixing plate, Art. No. 03410.0-00
	2 fixing plates (self-adhesive), Art. No. 09515.0-00
Note	120VAC and DC voltages on request

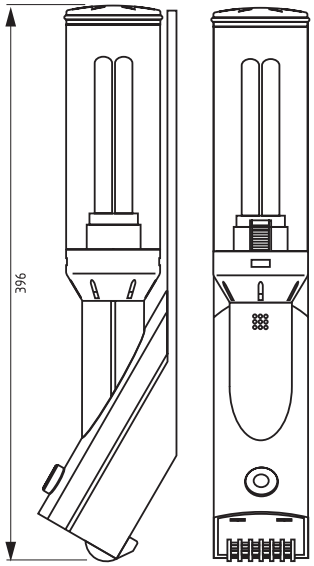

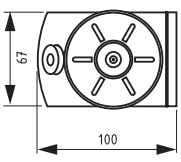



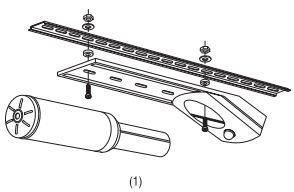

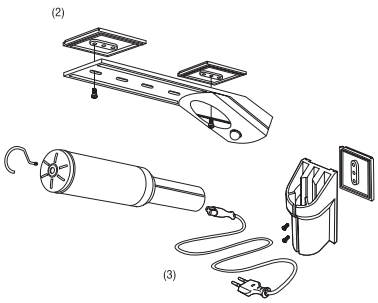

(1) Standard screw fixing to DIN rail

(2) 2 self-adhesive fixing plates, Art. No. 09515.0-00

(3) Wall holder with connection cable (2m), hook and self-adhesive fixing plate, Art. No. 03410.0-00. By using an additional wall holder the lamp can be used as a hand lamp.

Art. No.	Operating voltage	Power consumption
02600.0-00	230VAC, 50Hz	20W (equals 100W light bulb)

Dual Lamp DL 026 Series with movement sensor



- **Versatile – base lamp or hand lamp**
- **Long-life energy saving lamp**
- **Automatic switching**
- **Alternative solution for door switch**
- **Connections for further lamps**

Dual lamp with movement sensor (incl. base station)

CE RoHS 2002/95/EC compliant

Technical Data

Luminosity	1000Lm
Lamp type	energy saving lamp, E27 socket
Service life	10,000h
Switch	PIR movement sensor, approx. 3min. fixed switch-on duration
Connection	4-pole screw connector 2.5mm² (torque 0.5Nm max.) for power
	connection and further lamps
Mounting	screw fixing (e.g. 35mm DIN rail)
Casing	plastic according to UL94 V-0, light grey
Weight	approx. 0.60kg
Fitting position	variable
Operating / Storage temperature	-20 to +50°C (-4 to +122°F) / -45 to +70°C (-49 to +158°F)
Protection type / Protection class	IP20 / II (double insulated)
Approvals	-
Accessories	wall holder with connection cable (2m), hook and
	fixing plate, Art. No. 03410.0-00
	2 fixing plates (self-adhesive), Art. No. 09515.0-00
Note	120VAC and DC voltages on request

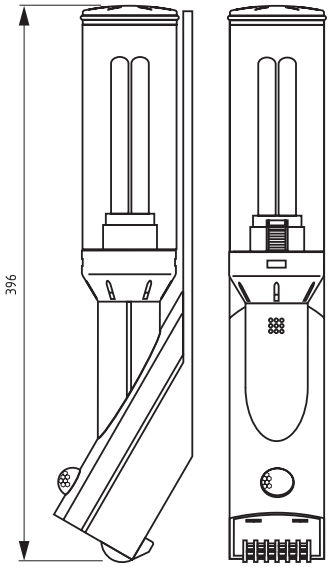

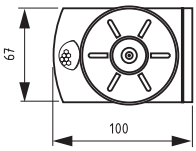

The PIR movement sensor switches the lamp on when the enclosure door is opened. The switch-on time is reset with every further registered movement. The movement sensor does not react to movement on the other side of glass and so can be used in enclosures with glass doors.

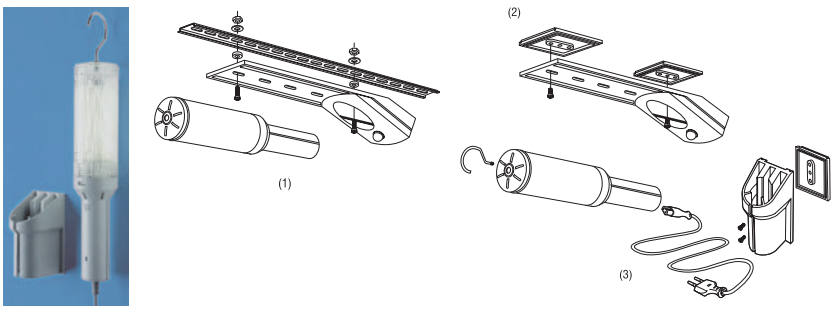

(1) Standard screw fixing to DIN rail
(2) 2 self-adhesive fixing plates, Art. No. 09515.0-00
(3) Wall holder with connection cable (2m), hook and self-adhesive fixing plate, Art. No. 03410.0-00.
By using an additional wall holder the lamp can be used as a hand lamp.

Art. No.	Operating voltage	Power consumption
02601.0-00	230VAC, 50Hz	20W (equals 100W light bulb)

Hand Lamp DL 026 Series with lamp holder



Long-life energy saving lamp

Versatile

CE RoHS 2002/95/EC compliant

Technical Data

Luminosity	1000Lm
Lamp type	energy saving lamp, E27 socket
Service life	10,000h
Connection	power cable (2m) with Euro plug
Mounting	screws or fixing plate (self-adhesive)
Casing	plastic according to UL94 V-0, light grey
Weight	approx. 0.60kg
Fitting position	variable
Operating / Storage temperature	-20 to +50°C (-4 to +122°F) / -45 to +70°C (-49 to +158°F)
Protection type / Protection class	IP20 / II (double insulated)
Approvals	-
Included in delivery	lamp holder, hook and fixing plate
Note	120VAC and DC voltages on request

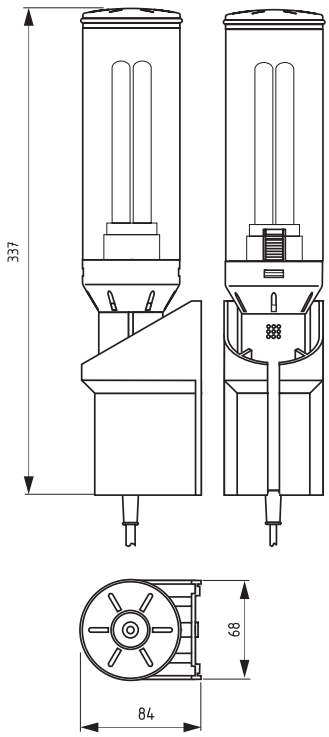



Art. No.	Operating voltage	Power consumption
02610.0-00	230VAC, 50Hz	20W (equals 100W light bulb)



Lamp shown with protective plastic cover (see Accessories)

- **Magnetic or optional DIN rail mounting**
- **Energy-saving lamp**
- **Lamp without/with electrical socket (choice of sockets)**
- **On/Off switch**

The compact lamp KL 025 was especially designed for use in enclosures. A powerful magnet enables the lamp to be mounted freely in any desired position in metal enclosures saving time and installation problems. The integrated electrical socket allows the use of additional appliances.

CE RoHS 2002/95/EC compliant

Technical Data

Luminosity	900 Lm
Lamp type	compact fluorescent lamp with integral starter
Service life	5,000 h
Switch	on/off light switch
Connection	3-pole terminal 2.5mm² with cable clamp, torque 0.8Nm max.
Mounting	magnet fixing
Casing	plastic, light grey
Dimensions	355 x 65 x 70mm
Weight	approx. 1.0kg
Fitting position	variable
Operating / Storage temperature	-20 to +50°C (-4 to +122°F) / -45 to +70°C (-49 to +158°F)
Protection type	IP20
Accessories	lamp cover, Art. No. 09520.0-00 (see photo)

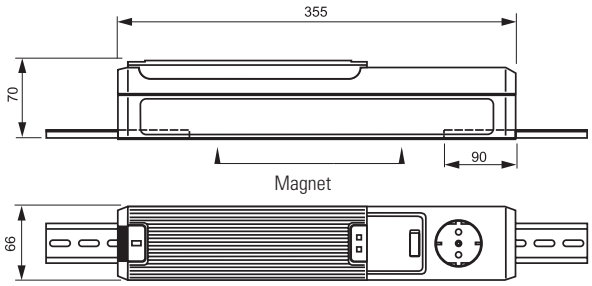

In plastic, aluminium or stainless steel cabinets the lamp can be fixed using screws together with inserted 35mm DIN rail sections.

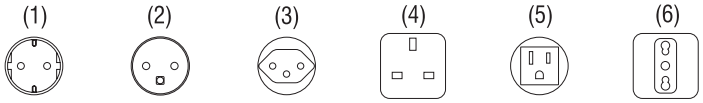

Art. No.	Operating Voltage	Socket	Power consumption	Nominal Current	Protection class	Approvals
02500.0-00	230VAC, 50Hz	Germany/Russia (1)	11W (equals 75W light bulb)	16.0A	I (earthed)	VDE
02500.0-07	230VAC, 50Hz	none	11W (equals 75W light bulb)	-	II (double insulated)	-
02501.0-00	230VAC, 50Hz	France/Poland (2)	11W (equals 75W light bulb)	16.0A	I (earthed)	-
02502.0-00	230VAC, 50Hz	Switzerland (3)	11W (equals 75W light bulb)	10.0A	I (earthed)	-
02510.0-00	230VAC, 50Hz	UK/Ireland (4)	11W (equals 75W light bulb)	13.0A	I (earthed)	-
02512.0-00	230VAC, 50Hz	Italy (6)	11W (equals 75W light bulb)	16.0A	I (earthed)	-
02505.9-00	120VAC, 60Hz	USA/Canada (5)	9W (equals 60W light bulb)	15.0A	I (earthed)	-
02505.9-01	120VAC, 60Hz	none	9W (equals 60W light bulb)	-	II (double insulated)	-

Electrical Socket SD 035 Series





Quickly connected
Available with or without fuse
Clip fixing

The DIN rail mounted electrical socket can be quickly fitted and connected in enclosures allowing the use of auxiliary products such as hand lamps, measuring devices, soldering irons etc. The unit is available with and without fuse and in many world socket standards.

CE RoHS 2002/95/EC compliant

Technical Data

Connection	3 x pressure clamps for stranded and rigid wire 0.5 - 2.5mm²
Mounting	clip for 35mm DIN rail, EN50022
Casing	plastic according to UL94 V-0, light grey
Dimensions	92 x 62 x 48mm
Weight	approx. 0.20kg
Fitting position	variable
Operating / Storage temperature	-45 to +70°C (-49 to +158°F)
Protection type / Protection class	IP20 / I (earthed)

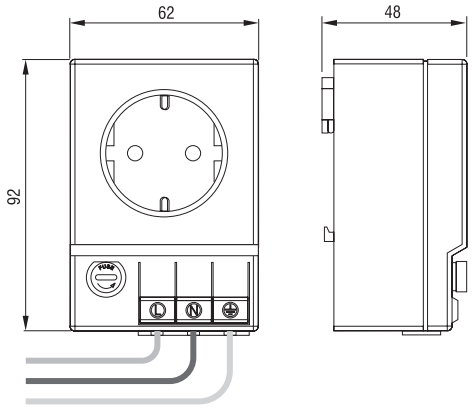

Connections from mains

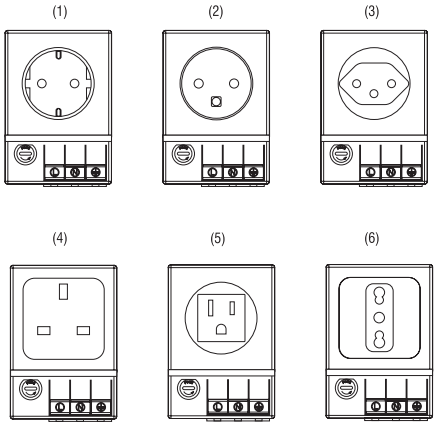

Art. No.	Operating Voltage max.	Socket	Model	Nominal Current	Approvals
03500.0-00	250VAC	Germany/Russia (1)	with fuse*	6.3A	-
03500.0-01	250VAC	Germany/Russia (1)	without fuse	16.0A	-
03501.0-00	250VAC	France/Poland (2)	with fuse*	6.3A	-
03501.0-01	250VAC	France/Poland (2)	without fuse	16.0A	-
03502.0-00	250VAC	Switzerland (3)	with fuse*	6.3A	-
03502.0-01	250VAC	Switzerland (3)	without fuse	10.0A	-
03503.0-00	250VAC	UK/Ireland (4)	with fuse*	6.3A	-
03503.0-01	250VAC	UK/Ireland (4)	without fuse	13.0A	-
03504.0-00	125VAC	USA/Canada (5)	with fuse*	6.3A	UL File No. E222026
03504.0-01	125VAC	USA/Canada (5)	without fuse	15.0A	UL File No. E222026
03505.0-00	250VAC	Italy (6)	with fuse*	6.3A	-
03505.0-01	250VAC	Italy (6)	without fuse	16.0A	-

*fuse Ø 5 x 20mm





Photo: Inside view

High degree of protection

Easy to install

It has become more and more important to provide a protected enclosure environment for valuable and crucial electrical and electronic components. In a tightly closed enclosure, pressure differentials can occur during extreme temperature variations, such as day/night operation. When this occurs, the risk of dust and humidity being absorbed into the control panel increases dramatically. The specially designed pressure compensation plug DA 084 permits a controlled change in pressure. It can be installed easily in any enclosure. Because of the pressure compensation plug's high degree of protection (IP45), the protection type of the enclosure will not be affected.

CE RoHS 2002/95/EC compliant

Technical Data

Mounting	PG 29 thread with union nut
Material	plastic according to UL94 V-0
Air interface	approx. 7cm²
Dimensions	Ø 65.5 x 30.5mm
Fitting position	variable
Operating / Storage temperature	-45 to +70°C (-49 to +158°F)

Installation

Make cut-out Ø 37^{+1}mm in enclosure wall and mount pressure compensation device with nut. Please make sure that the sealing gasket is put in place on the outer side panel of the enclosure. For optimal pressure compensation we recommend to use two devices on opposite sides towards the top of the enclosure.

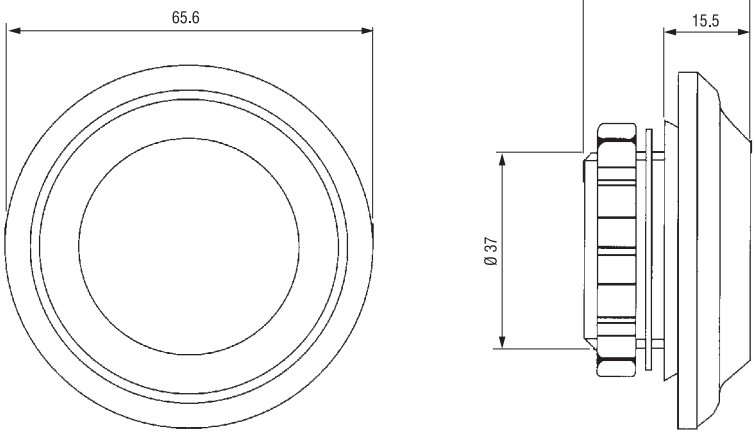

Art. No.	Model	Protection type	1 packing unit	Weight (approx.)
08400.0-00	without gasket	IP45	2 pieces	62g (31g/piece)
08400.0-04	with gasket	IP55	2 pieces	62g (31g/piece)

Pressure compensation Device DA 284 IP66





Photo: Inside view

High degree of protection
Semipermeable membrane
Easy to install

Pressure differentials in enclosures with a high degree of protection with respect to humidity and dust are a result of inside and outside temperature fluctuations. In case of negative pressure or vacuum, dust and humidity can be absorbed through the door seal and can enter the enclosure. As the humidity cannot exit the enclosure condensation may occur. The easy to install pressure compensation device DA 284 provides the compensation of pressure at a protection degree of **IP66**. A semipermeable membrane inside the plug allows air and humidity to leave the enclosure. In the opposite direction, it only allows dry air into the enclosure while humidity and dust from the outside are blocked by the membrane.

CE RoHS 2002/95/EC compliant

Technical Data

Mounting	thread M40 x 1.5 with nut
Depth in enclosure	approx. 16mm
Material	plastic, light grey
Sealing	sealing gasket NBR
Filter	semipermeable membrane
Air permeability	1200l/h at a pressure difference of min. 70mbar
Dimensions	Ø 60 x 37mm
Fitting position	variable
Operating / Storage temperature	-45 to +70°C (-49 to +158°F)

Installation

Make cut-out Ø 40.5$^{+0.5}$mm in enclosure wall and mount pressure compensation device with nut. Please make sure that the sealing gasket is put in place on the outer side panel of the enclosure. For optimal pressure compensation we recommend to use two devices on opposite sides towards the top of the enclosure.

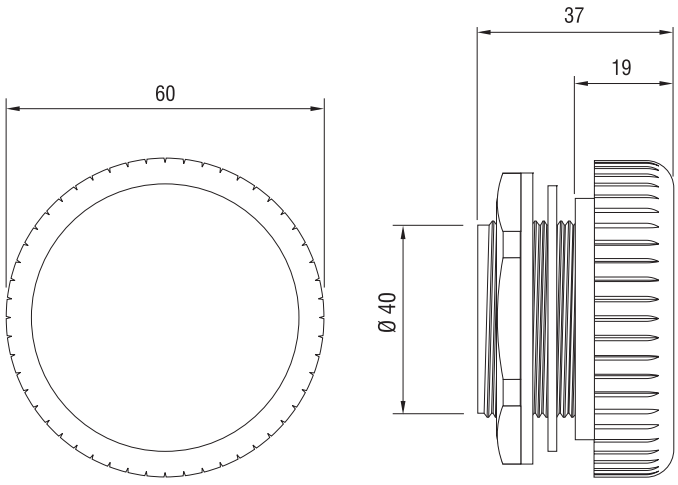

Art. No.	Protection type	1 packing unit	Weight (approx.)
28400.0-00	IP66 (EN 60529) / IPX9K (EN 40050-9)	2 pieces	90g (45g/piece)
28400.0-01	IP66 (EN 60529) / IPX9K (EN 40050-9)	1 piece	45g

Pressure compensation Device DA 284 IP66





Photo: Inside view

High degree of protection
Semipermeable membrane
Corrosion resistant
Food safe

Pressure differentials in enclosures with a high degree of protection with respect to humidity and dust are a result of inside and outside temperature fluctuations. In case of negative pressure or vacuum, dust and humidity can be absorbed through the door seal and can enter the enclosure. As the humidity cannot exit the enclosure condensation may occur. The easy to install pressure compensation device DA 284 provides the compensation of pressure at a protection degree of IP66. A semipermeable membrane inside the plug allows air and humidity to leave the enclosure. In the opposite direction, it only allows dry air into the enclosure while humidity and dust from the outside are blocked by the membrane.

CE RoHS 2002/95/EC compliant

Technical Data

Mounting	thread M40 x 1.5 with nut
Depth in enclosure	approx. 9mm
Material	stainless steel V2A (DIN 1.4404 / AISI 316 L)
Sealing	sealing gasket NBR
Filter	semipermeable membrane
Air permeability	1200l/h at a pressure difference of min. 70mbar
Dimensions	Ø 58 x 31mm
Fitting position	variable
Operating / Storage temperature	-45 to +80°C (-49 to +176°F)

Installation

Make cut-out Ø $40.5^{+0.5}$mm in enclosure wall and mount pressure compensation device with nut. Please make sure that the sealing gasket is put in place on the outer side panel of the enclosure. For optimal pressure compensation we recommend to use two devices on opposite sides towards the top of the enclosure.

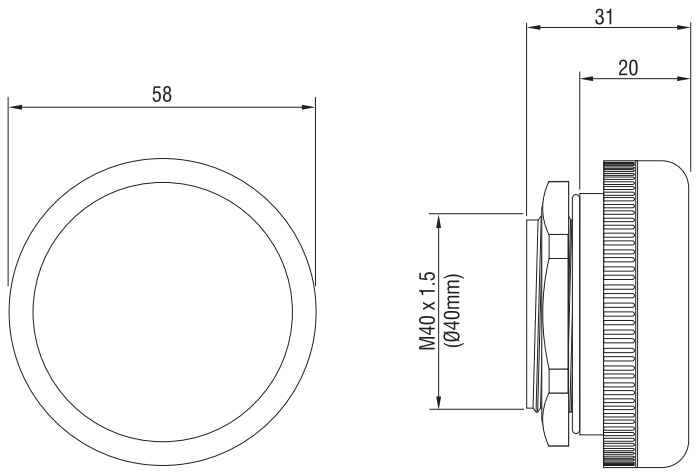

Art. No.	Protection type	1 packing unit	Weight (approx.)
28401.0-00	IP66 (EN 60529) / IPX9K (EN 40050-9)	1 piece	160g

Self-adhesive Appliance Holder STEGOFIX



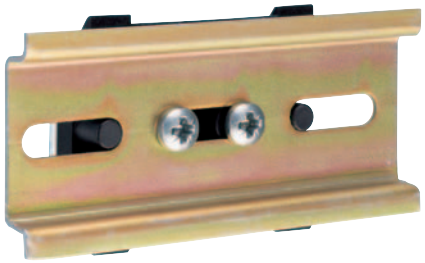

STEGOFIX is an appliance holder for direct fixing of small appliances and perforated 35mm DIN rails.

With STEGOFIX small appliances can be mounted in switch cabinets significantly quicker, easier and more economically than before, without drilling holes. Mounting DIN rails is a simple matter with STEGOFIX. Longer rails are mounted on several STEGOFIX units and joining two rails is also not a problem. Subsequent changes and the mounting of additional appliances can be carried out with ease – even in confined spaces.

STEGOFIX is a self-adhesive plastic unit with an adhesion power which will bear a continuous load of 500g. The high-performance industrial adhesive band is also non-ageing and designed with safety tolerances.

CE RoHS 2002/95/EC compliant

Technical Data

Load	500g after a 24h waiting period*
Mounting	self-adhesive (non-ageing, high-performance adhesive band)
Material	plastic according to UL94 V-0
Dimensions	43 x 38 x 14mm
Screw pitch	12.8mm; Ø 3.6mm, for perforated 35mm DIN rails
Operating / Storage temperature	-45 to +70°C (-49 to +158°F)

*depending on the conditions of use (e.g. surface condition, size of the device to be mounted, etc.) higher loads were achieved.

Installation

STEGOFIX can only be mounted on smooth surfaces, e.g. metals, lacquered surfaces and plastics (except polyethylene, polypropylene and rubber). The surfaces must be dry, free from dust, oil, separating agents and other contamination.

Application examples





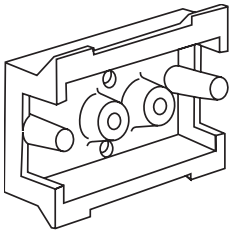

STEGOFIX

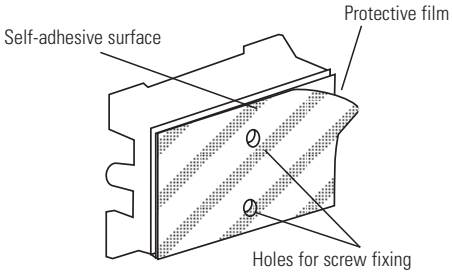

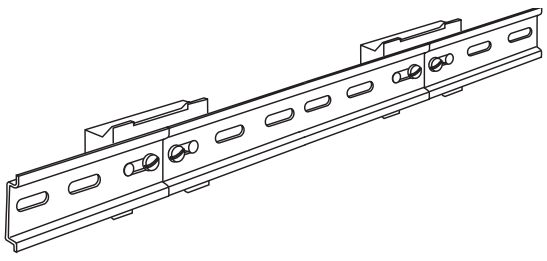

Art. No.	1 packing unit	Weight (approx.)
09510.0-01	5 pieces	60g (12g/piece)

Calculation of temperature control in enclosures

What's needed:

1. The dimensions of the enclosure (Height, Width, Depth) **[m]**
2. The enclosure position (e.g. single enclosure, enclosure in a row) according to calculation formula, enclosure surface area A **[m²]**
3. The enclosure material (metal, plastic) heat transfer coefficient from table, k **[W/m² K]**
4. The temperature difference between desired enclosure interior temperature Ti [°C] and the expected ambient temperature Tu [°C] (e.g. day/night, summer/ winter, climate zones) ΔT **[K=Kelvin]**
5. The stray power (self-warming) of all installed components during operation (e.g. transformers, relays, semiconductors) Pv **[W]**

Calculation and selection of parameters: enclosure surface area - heat transfer coefficient - temperature difference

1. Enclosure surface area from dimensions

2. Enclosure position (plan view) according to VDE 0660 part 500

		Formula for cabinet surface area A **[m²]** (H = Height W = Width D = Depth)
	Single enclosure free on all sides	A = 1.8 x H x (W + D) + 1.4 x W x D
	Single enclosure, wall mounted	A = 1.4 x W x (H + D) + 1.8 x D x H
	First or last enclosure in free standing row	A = 1.4 x D x (H + W) + 1.8 x W x H
	First or last enclosure in wall mounted row	A = 1.4 x H x (W + D) + 1.4 x W x D
	Middle enclosure in free standing row	A = 1.8 x W x H + 1.4 x W x D + D x H
	Middle enclosure in wall mounted row	A = 1.4 x W x (H + D) + D x H
	Middle enclosure in wall mounted row with covered top	A = 1.4 x W x H + 0,7 x W x D + D x H

Example: enclosure free on all sides, 2000mm high / 800mm wide / 600mm deep. A = 1.8 x 2.0 x (0.8 + 0.6) + 1.4 x 0.8 x 0.6 = 5.712m²

3. Enclosure material and its heat transfer coefficient k **[W/m² K]**

Steel sheet, painted	k ~ 5.5W/m² K
Steel sheet, stainless	k ~ 4.5W/m² K
Aluminium	k ~ 12W/m² K
Aluminium, double-walled	k ~ 4.5W/m² K
Polyester	k ~ 3.5W/m² K

4. Temperature difference ΔT **[K=Kelvin]**

$$\Delta T = Ti - Tu$$

i.e. the temperature difference between the interior and exterior temperatures

CALCULATION FORMULA FOR REQUIRED HEATING PERFORMANCE (HEATER):

Required heating performance P_H **[W]** = enclosure surface area A **[m²]** x heat transfer coefficient k **[W/m² K]** x temperature difference ΔT **[K]**

Example: W = 5.712m² x 5.5W/m² K x 15K = 471.24W

Result: Heater with 500W heating performance is required. If enclosure is situated outdoors the calculated heating performance must be doubled!

OR CHOOSE REQUIRED HEATING PERFORMANCE FROM DIAGRAM:

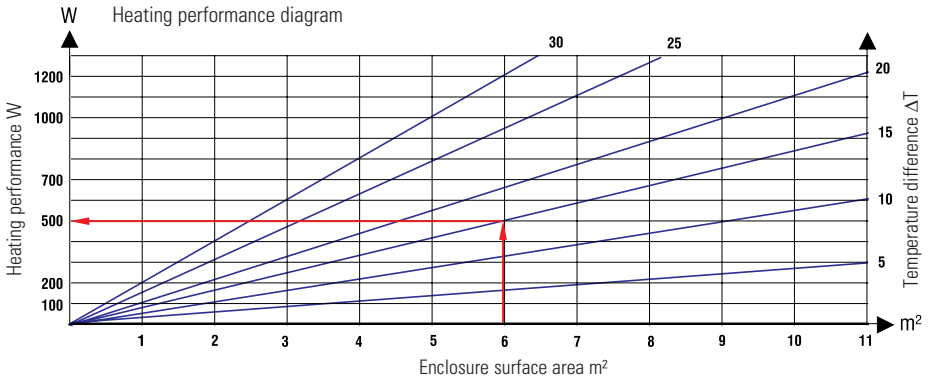

5. In the case of continuous stray power Pv **[W]** (self-warming) this must be deducted from the calculated heating performance.

CHOOSE REQUIRED COOLING PERFORMANCE FROM DIAGRAM:

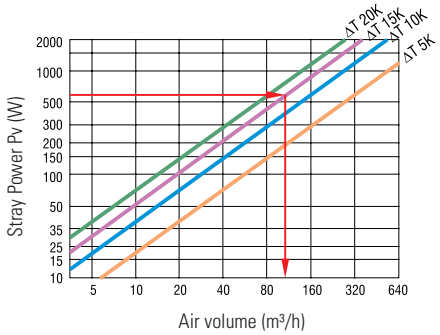

OR CALCULATE USING FORMULA FOR REQUIRED COOLING PERFORMANCE (FILTER FAN):

$$\text{Required air volume V } [\mathbf{m^3/h}] = \frac{\text{installed stray power Pv } [\mathbf{W}]}{\text{temperature difference } \Delta T\ [\mathbf{K}]} \times \text{air constant f* } [\mathbf{3.3 m^3\ K/Wh}]$$

Example: $V = \frac{\mathbf{600W}}{\mathbf{15K}} \times 3.3\,m^3\,K/Wh = 132\,m^3/h$

*f (0-100) = 3.1m³ K/Wh, f (100-250) = 3.2m³ K/Wh, f (250-500) = 3.3m³ K/Wh, f (500-750) = 3.4m³ K/Wh, f (750-1000) = 3.5m³ K/Wh

STEGO Elektrotechnik GmbH
Kolpingstraße 21
74523 Schwäbisch Hall
Deutschland
Tel. +49 (0)791 95058 0
Fax +49 (0)791 95058 45
info@stego.de
www.stego.de

STEGO, Inc.
1395 S. Marietta Pkwy
Building 800
Marietta, GA 30067
USA
Tel. +1 770 984 0858
Fax +1 770 984 0615
info@stegousa.com
www.stegousa.com

STEGO Norden AB
Box 7225
Linjalvägen 6B
SE-187 13 Täby
Sverige
Tel. +46 (0)8 545 86160
Fax +46 (0)8 545 86161
info@stegonorden.se
www.stegonorden.se

STEGO do Brasil Ltda.
Rua Cons. Saraiva 306 - cj 64
Santana
02037-020 São Paulo SP
Brasil
Tel. +55 (0)11 2283-3222
Fax +55 (0)11 2978-4783
info@stego.com.br
www.stego.com.br

STEGO Italia S.R.L.
Via Trucchi 25
10078 Venaria (TO)
Italia
Tel. +39 011 4593 287
Fax +39 011 4593 164
info@stego.it
www.stego.it

STEGO France S.A.
Port de Conflans Fin d´Oise
Le Beaupré N° 2
78700 Conflans Sainte Honorine
France
Tel. +33 (0)1 3919 5757
Fax +33 (0)1 3919 5447
info@stego.fr
www.stego.fr

STEGO UK Ltd.
Unit 12, First Quarter Business Park
Blenheim Road
Epsom
Surrey KT19 9QN
England
Tel. +44 (0)1372 747250
Fax +44 (0)1372 729854
info@stego.co.uk
www.stego.co.uk

STEGOTRONIC S.A.
c/. França, N° 20 Nave 2
Poligono Industrial Las Comas
08700 Igualada
España
Tel. +34 (0)93 806 6026
Fax +34 (0)93 806 6057
stegotronic@stegotronic.es
www.stegotronic.es

STEGO Polska Sp. z o.o.
Ul. Banacha 11
41-200 Sosnowiec
Polska
Tel. +48 (0)32 263 22 42
Fax +48 (0)32 263 22 68
info@stego.pl
www.stego.pl

STEGO Czech s.r.o.
V Iužích 818/23
14200 Praha 4 - Libuš
Česká republika
Tel. +420 261 910 544
Fax +420 261 910 545
info@stego.cz
www.stego.cz



© STEGO Elektrotechnik GmbH 04/2008