PRODUCT DETAILS

ARTICLE: 37419FR

WHEEL ZS 200X50/60 BB SWIVEL P60 +BRAKE



Wheel series ZS

Castiron wheels with soft blue polurethane coating 87 Sh.A; available with shielded precision ball bearings.
Wheel fitted with ball bearings.

Castor series P60

P60 series, heavy duty pressed steel forks, swivel with hardened steel double races & 'water resistant' protections. Finish: zincplated.
Trailing foot brake - total stop.

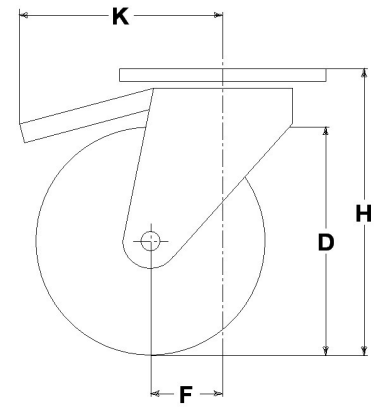

Technical data

Wheel diameter	D	200 mm
Tyre width	E	50,0 mm
Bearing seat diameter	s	47 mm
Bore diameter	d	20 mm
Outer faces bearings distance	V	54 mm
Weight article		6,950 kg
Hub width	L	60 mm
Overall height	H	249 mm
Top plate outer dimensions	AxB	135x110 mm
Bolt hole spacing	axb	105x75 mm
Bolt hole spacing	axb	105x80 mm
Fixing bolt diameter	g	M12
Offset	F	66 mm
Fork width	U	60 mm
Load Capacity		850 kg

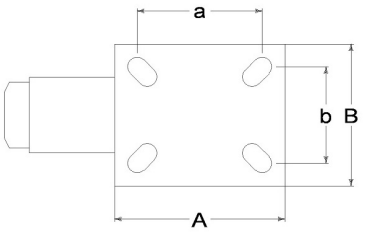

Related Articles

Spare part wheel: 37030CC
Basic version: 37419
Version with footguard: 37419PP
Version with trailing brake and footguard: 37419FRPP
Version with leading brake: 37419FV
Version with leading brake and footguard: 37419FVPP

GENERAL INFORMATION / RECOMMENDATIONS AND WARNINGS
The cited text and the complete catalogue in their most up-dated versions are available in the OEM's website page www.lagspa.it/downloads. The dimensions, descriptions, specifications and illustrations herein are indicative and subject to variations without notice. The fact that products are illustrated herein does not necessarily imply they are available from stock nor does it place us under any obligation to supply them.
Tests carried out refer to the original products with original accessories: the replacement of one of the components with others of different manufacture might prevent the same results from being achieved and will automatically invalidate any guarantee. Please contact our technical service concerning any special application.