Powering Business Worldwide

07/22 IL034093ZU

Instruction Leaflet
Montageanweisung
Notice d'installation
Instrucciones de montaje
Istruzioni per il montaggio
安装说明
Инструкция по монтажу
Montagehandleiding
Montagevejledning
Οδηγίες εγκατάστασης
Instruções de montagem
Monteringsanvisning
Asennusohje
Návod k montáži
Paigaldusjuhend
Szerelési utasítás
Montāžas instrukcija
Montavimo instrukcija
Instrukcja montażu
Navodila za montažo
Návod na montáž
Монтажни инструкции
Instrucțiuni de montaj
Upute za montažu
Montaj talimatı
Упутство за употребу
Monteringsanvisning
Інструкція з монтажу
منشـــور التعليمـــات

(en) **Electric current! Danger to life!**
Installation, commissioning and maintenance work must be carried out by qualified personnel only.

(de) **Lebensgefahr durch elektrischen Strom!**
Arbeiten bzw. Montage an diesem Produkt dürfen nur von Elektrofachkräften und elektrotechnisch unterwiesenen Personen ausgeführt werden.

(fr) **Tension électrique dangereuse !**
L'installation de l'appareil, ainsi que tous les travaux effectués sur celui-ci, doivent être réalisés par un électricien qualifié ou par un personnel spécialement formé.

(es) **¡Corriente eléctrica! ¡Peligro de muerte!**
La instalación del dispositivo, así como todos los trabajos en él, deben ser realizados por un electricista calificado o por personal especialmente capacitado.

(it) **Tensione elettrica: Pericolo di morte!**
L'installazione e il lavoro sul dispositivo devono essere effettuati da un elettricista qualificato o da personale specializzato.

(zh) **触电危险！**
設備的安裝，以及所有工作，必須由合格的電工或經過專門培訓的人員完成。

(ru) **Электрический ток! Опасно для жизни!**
Установка и эксплуатация устройства должны выполняться квалифицированным электриком или специально обученным персоналом.

(nl) **Levensgevaar door elektrische stroom!**
Installatie van het apparaat en alle werkzaamheden eraan, mogen uitsluitend door een gekwalificeerd elektricien of speciaal opgeleid vakpersoneel worden uitgevoerd.

(da) **Livsfare på grund af elektrisk strøm!**
Arbejde i forbindelse med installation, opstart ogvedligehold må kun udføres af kvalificeret personale.

(el) **Προσοχή, κίνδυνος ηλεκτροπληξίας!**
Η εγκατάσταση, εκκίνηση και συντήρηση θα πρέπει να πραγματοποιείται μόνο από εξειδικευμένο προσωπικό.

(pt) **Perigo de vida devido a corrente eléctrica!**
A instalação do dispositivo, bem como todos os trabalhos devem ser realizados por um eletricista qualificado ou por pessoal especialmente formado.

(sv) **Livsfara genom elektrisk ström!**
Installation, idrifttagande och underhållsarbete får endast utföras av behörig personal.

(fi) **Hengenvaarallinen jännite!**
Laitteen asennus ja käyttö ainoastaan sähköasentajan tai siihen perehdytetyn henkilön toimesta.

(cs) **Nebezpečí úrazu elektrickým proudem!**
Instalace zařízení a veškeré práce na něm musí být provedeny kvalifikovaným elektrikářem nebo speciálně vyškoleným personálem.

(et) **Eluohtlik! Elektrilöögioht!**
Paigaldus-, kasutus- ja hooldustöid peab läbi viima ainult kvalifitseeritud personal.

(hu) **Életveszély az elektromos áram révén!**
Az eszköz felszerelését, valamint az ehhez kapcsolódó összes munkát szakképzett villanyszerelővel vagy szakképzett személyzetnek kell elvégeznie.

(lv) **Elektriskā strāva apdraud dzīvību!**
Uzstādīšana, nodošana ekspluatācijā un apkopes darbi jāveic tikai kvalificētam personālam.

(lt) **Pavojus gyvybei dėl elektros srovės!**
Įrengimo, paleidimo ir techninės priežiūros darbus turi atlikti tik kvalifikuotas personalas.

(pl) **Porażenie prądem elektrycznym stanowi zagrożenie dla życia!**
Instalacja urządzenia, jak również prace nad nim, muszą być wykonywane przez wykwalifikowanego elektryka lub specjalnie wyszkolony personel.

(sl) **Življenjska nevarnost zaradi električnega toka!**
Dela montaže, zagona in vzdrževanja morajo izvajati samo usposobljeno osebje.

(sk) **Nebezpečenstvo ohrozenia života elektrickým prúdom!**
Inštalácia prístroja, ako aj všetky práce na ňom musia byť vykonané kvalifikovaným elektrotechnikom alebo špeciálne vyškoleným personálom.

(bg) **Опасност за живота от електрически ток!**
Инсталирането на устройството, както и всяка работа по него, трябва да бъде извършвано от квалифициран електротехник или от специално обучен персонал.

(ro) **Atenție! Pericol electric!**
Montajul și lucrul cu acest aparat trebuie făcute numai de un electrician calificat sau de personal tehnic specializat.

(hr) **Opasnost po život uslijed električne struje!**
Radove ugradnje, puštanja u pogon i održavanja mora vršiti samo kvalificirano osoblje.

(tr) **Elektrik akımı! Hayati tehlike!**
Bu ürünün çalıştırılması veya kurulumu sadece elektroteknik eğitimleri almış olan ehliyetli elektrikçiler ve kişiler tarafından yapılmalıdır.

(sr) **Електрична струја! Опасност по живот!**
Арбеитен бзв. Монтажа и диесем Продукт дарф од Електрофацхкрафтен унд електротецхнисцх унтервиесенен Персонен аусгефухрт верден.

(no) **Elektrisk strøm! Livsfare!**
Installasjon av enheten, samt arbeid på den, skal kun utføres av kvalifisert personell, eller av de som er spesielt opplært til dette arbeidet.

(uk) **Електричний струм! Небезпечно для життя!**
Встановлення пристрою, так само, як і робота з ним, повинні виконуватись кваліфікованим електриком або персоналом, що пройшов спеціальну підготовку.

(ar) **تحـذير ! تيـار كهربـائي ! خطـر مـوت !**
التثبيـــت والتكليـــف و أعمـــال الصـيانة يجـب أن تقـام فقـط مـن طـرف المـــوظفين المـــؤهلين

RASP5-xxxxEIP
RASP5-xxxxPNT

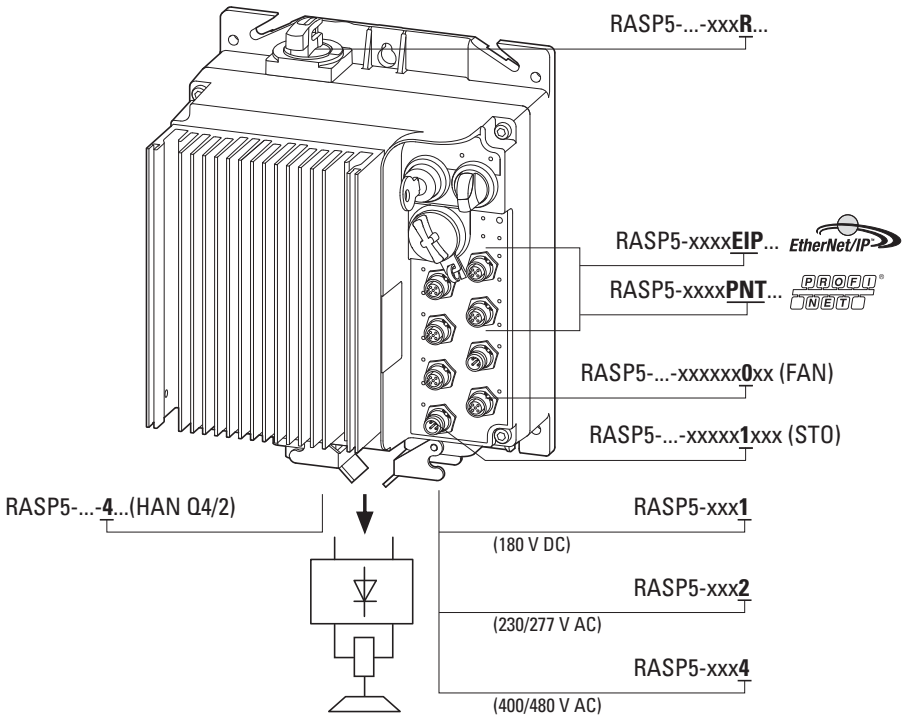

Eaton.com/documentation
MN034004…

Eaton.com/EcoDesign-VFD
MZ040046EN

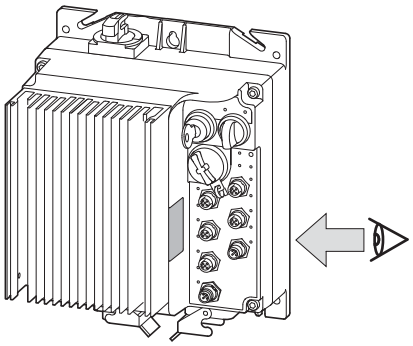

RASP5-2 4 2 0 EIP - 4 12 R 1 0 0 S1

- 0 = No fan
  1 = fan
- 0 = No STO
  1 = STO
- 0 = No brake resistor
  1 = Brake resistor
- 0 = No option
  R = Repair switch
- 4 = HAN Q4/2
- EIP = Ethernet/IP
  PNT = Profinet
- 0 = No actuation for motor brakes
  1 = 180 V DC control voltage for external motor brakes
  2 = 230/277 V AC control voltage for external motor brakes
  4 = 400/480 V AC control voltage for external motor brakes
- 2 = 2 Actuator outputs
- 4 = 4 Sensor inputs
- 2 = 2.4 A
  4 = 4.3 A
  5 = 5.6 A
  8 = 8.5 A

RASP5-…-xxx0xx0xx

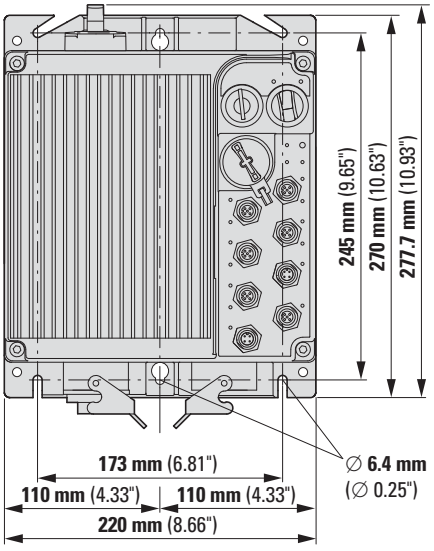

RASP5-…-xxx0xx1xx

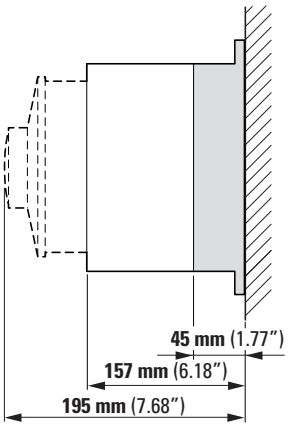

RASP5-…-xxxR

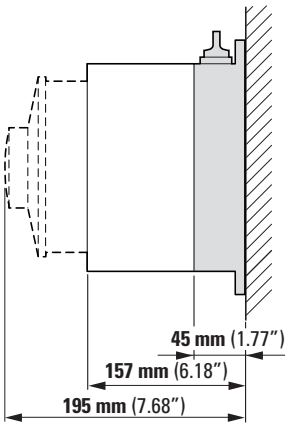

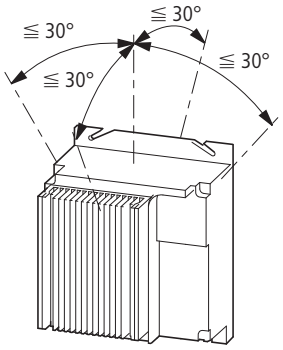

kg

RASP5-…-xxx0xx0xx	3.44
RASP5-…-xxxR	3.82
RASP5-…-xxxx1xxxx1…	3.46

07/22 IL034093ZU

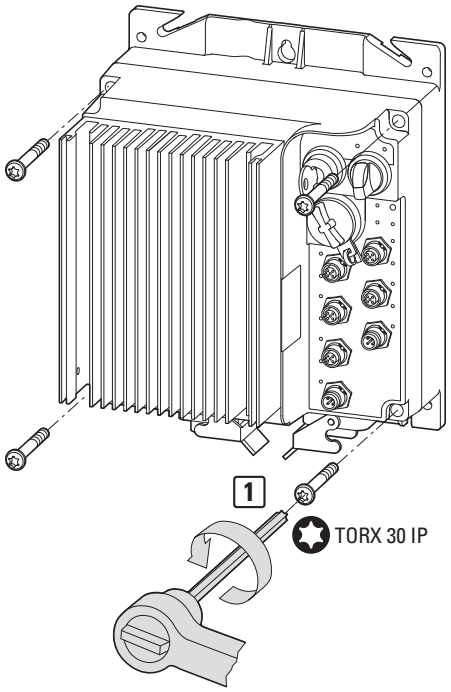

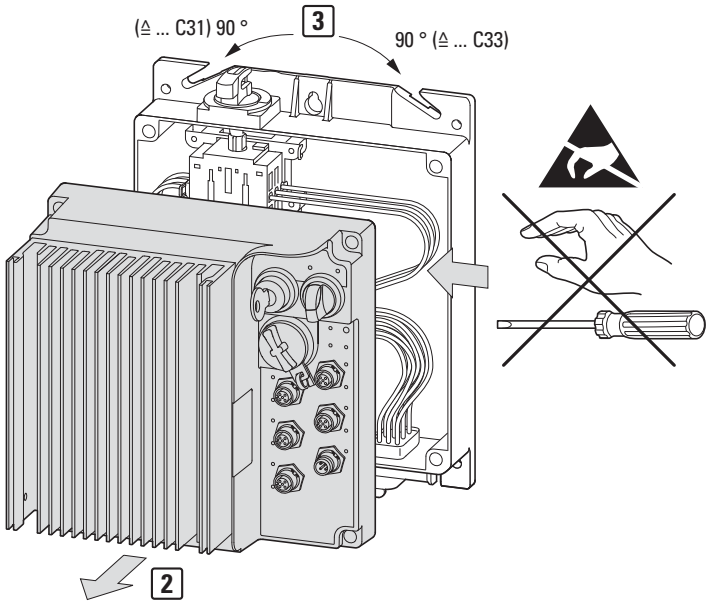

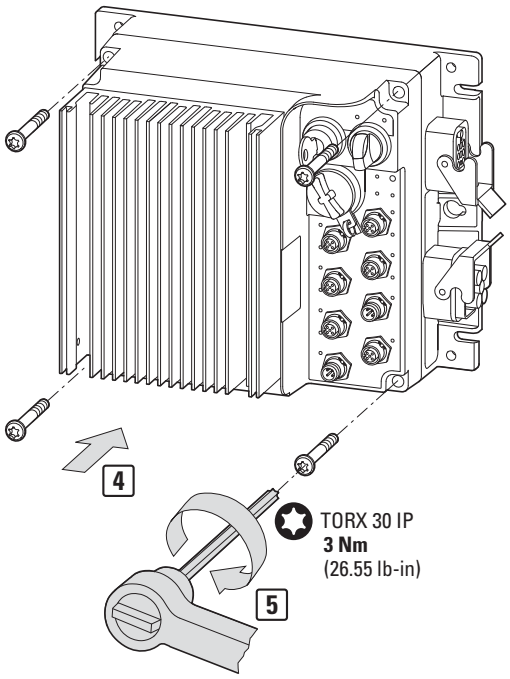

!

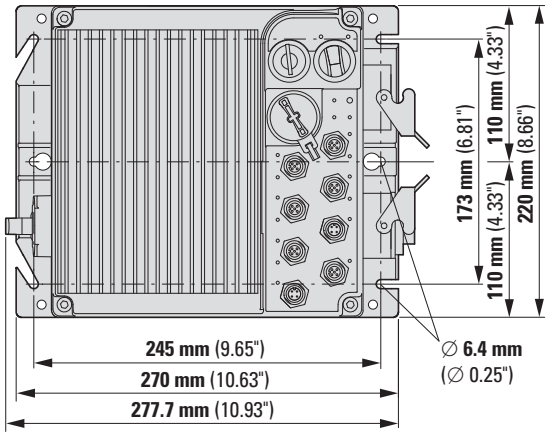

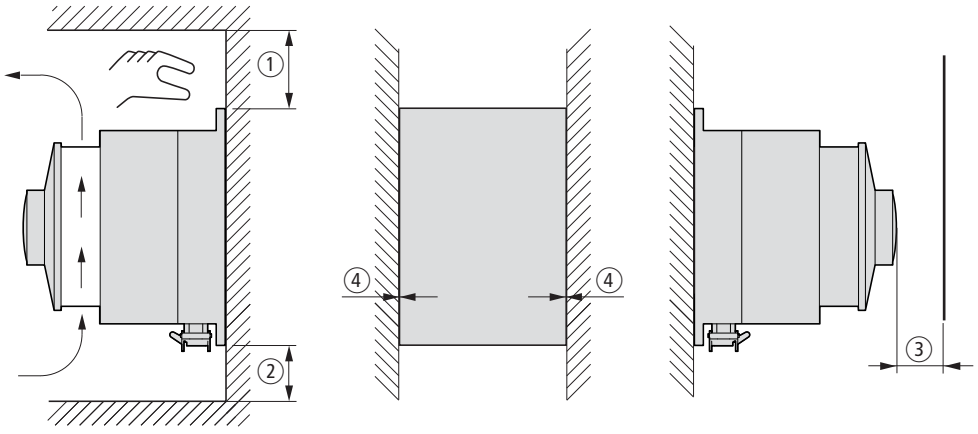

① **≧ 150 mm** (≧ 5.91")
② **≧ 100 mm** (≧ 3.94")
③ **≧ 50 mm** (≧ 1.97")
④ **≧ 0**

07/22 IL034093ZU

1a

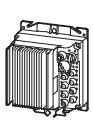

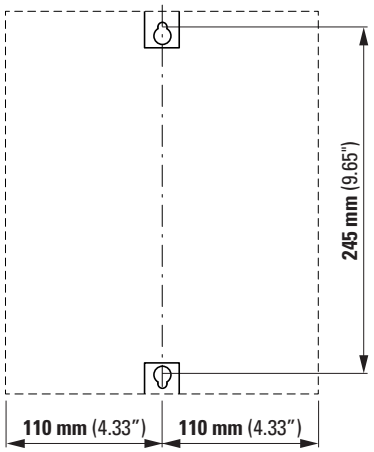

1a

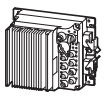

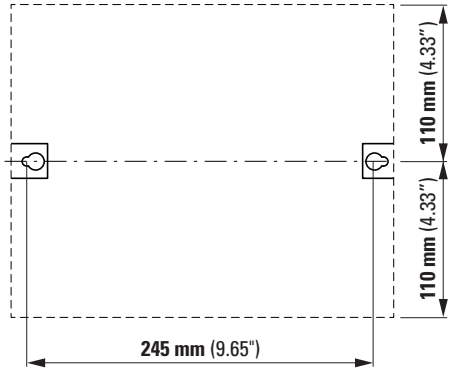

1b

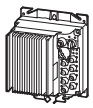

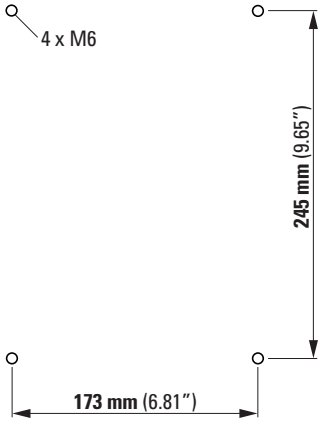

1b

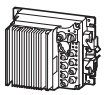

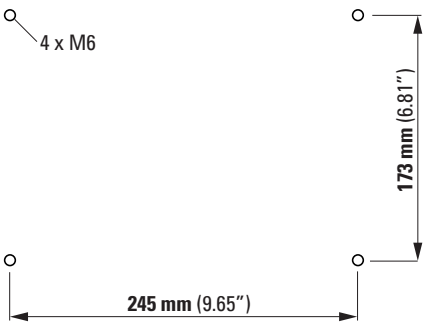

2

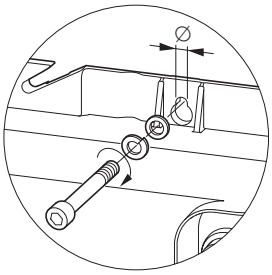

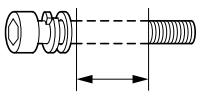

Ø			
6.2 mm (0.24")	2 x / 4 x M6	4 x DIN 127, M6	4 x DIN 125, M6

3

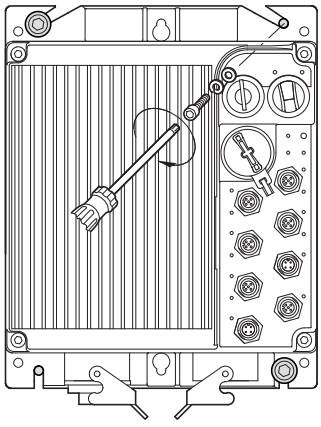

1.3 Nm
(11.51 lb-in)

3

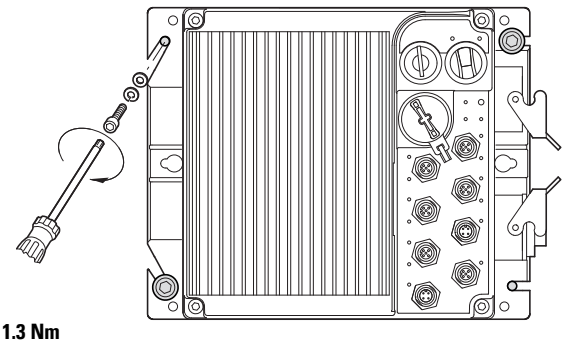

1.3 Nm
(11.51 lb-in)

07/22 IL034093ZU

(en) **CAUTION**
Connect only in voltage-free state!

(de) **VORSICHT**
Nur im spannungsfreien Zustand anschließen!

(fr) **ATTENTION**
Raccordez l'appareil uniquement hors tension !

(es) **ATENCIÓN**
¡Conectar únicamente en estado sin tensión!

(it) **ATTENZIONE**
Collegare solo in assenza di tensione!

(zh) **注意**
必须在断电状态下进行连接！

(ru) **ВНИМАНИЕ**
Подключать только в обесточенном состоянии!

(nl) **VOORZICHTIG**
Alleen in spanningsloze toestand aansluiten!

(da) **FORSIGTIG**
Må kun tilsluttes i spændingsfri tilstand!

(el) **ΠΡΟΣΟΧΗ**
Συνδέστε μόνο όταν δεν επικρατεί τάση!

(pt) **CUIDADO**
Ligar apenas com a tensão desligada!

(sv) **OBSERVERA**
Får endast anslutas i spänningsfritt tillstånd!

(fi) **HUOMIO**
Kytke vain jännitteettömässä tilassa!

(cs) **UPOZORNĚNÍ**
Připojujte jen při zcela odpojeném napájení!

(et) **ETTEVAATUST**
Ühendada ainult pingevabas olekus!

(hu) **VIGYÁZAT**
Csak feszültségmentes állapotban csatlakoztassa!

(lv) **UZMANĪBU**
Pieslēgt tikai tad, kad nenotiek sprieguma padeve!

(lt) **PERSPĖJIMAS**
Prijungti tik tada, kai išjungta įtampa!

(pl) **PRZESTROGA**
Podłączać zawsze po uprzednim odłączeniu od zasilania elektrycznego!

(sl) **POZOR**
Napravo priključite le, ko ni pod napetostjo!

(sk) **UPOZORNENIE**
Napájať len v stave bez napätia!

(bg) **ВНИМАНИЕ**
Свързвайте само, когато уреда не е под напрежение!

(ro) **ATENTIE**
Conectați doar când aparatul nu se află sub tensiune!

(hr) **PAZNJA**
Priključujte samo u beznaponskom stanju!

(tr) **DİKKAT**
Sadece gerilim sıfırken bağlayın!

(sr) **ОПРЕЗ**
Прикључујте само у стању без напона!

(no) **FORSIKTIG**
Tilkoble bare i spenningsfri tilstand!

(uk) **УВАГА**
Підключати лише за відсутності напруги!

(ar) **انتبـــاه**
التوصـيل فقـط فـي حـال عـدم الفولتيـة!

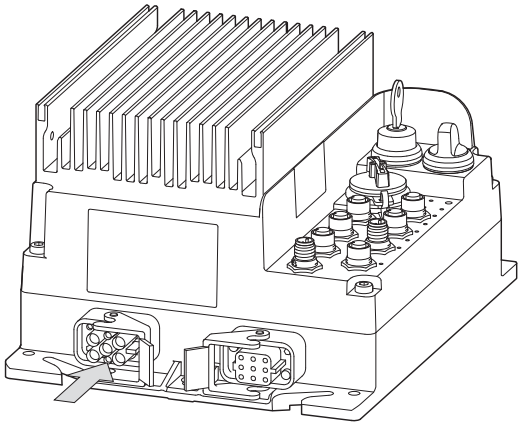

Mains (TN, TT)

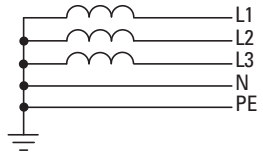

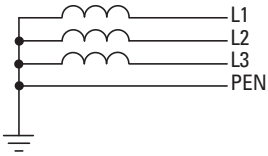

U_{LN} = 3 AC 400 V, N, PE
380 V -10 %…480 V +10 %
50/60HZ (45…66 Hz ±0%)

HAN Q4/2 M

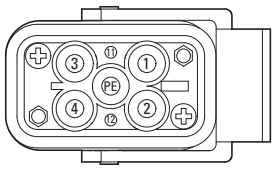

PIN	400/480 V AC
1	L1
2	L2
3	L3
4	(N)
PE	PE
11	–
12	–

HAN Q4/2 F

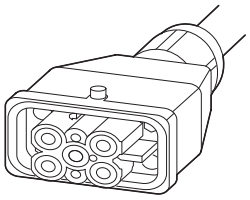

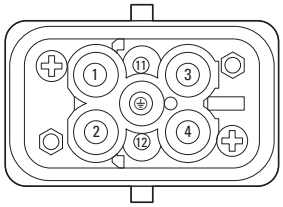

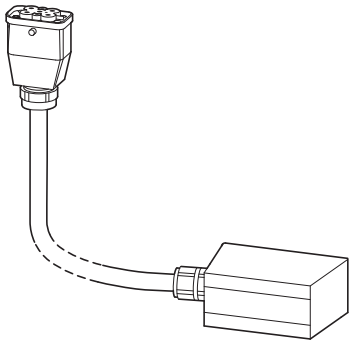

RA-Q4/C1-1M5
→ RA-C1-PLF1

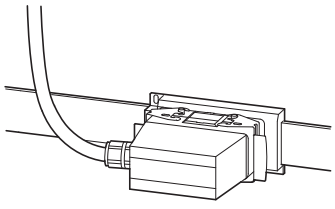

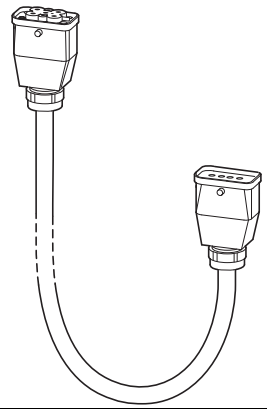

RA-Q4/C2-1M5
→ RA-C2-S1-4

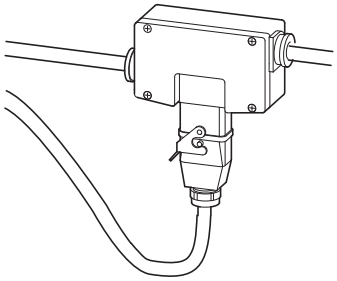

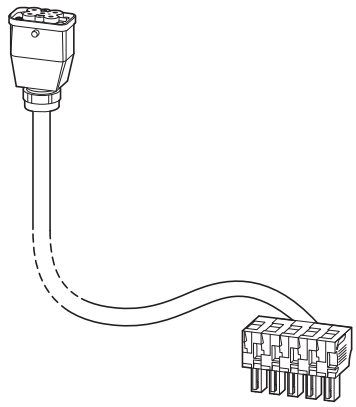

→ RA-C4-PB65

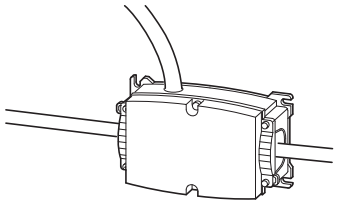

07/22 IL034093ZU

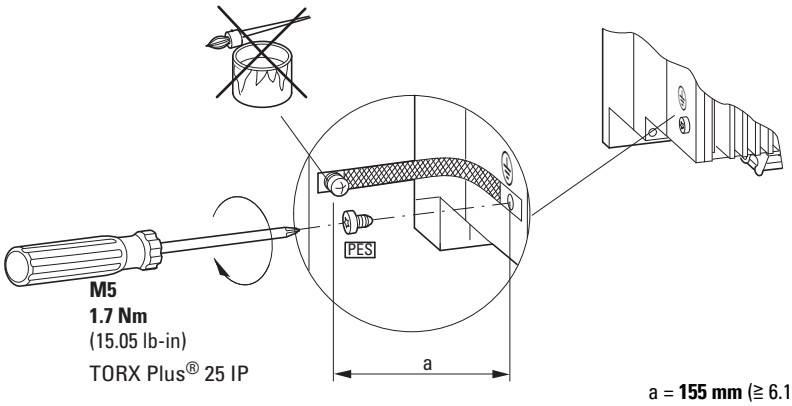

Motor

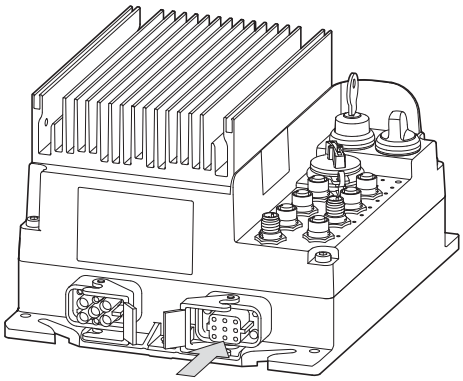

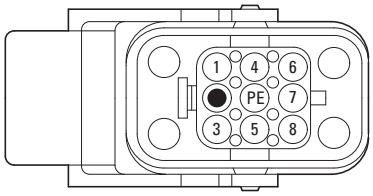

DESINA

	I_e	Motor 400 V, 50 Hz	440 - 460 V, 60 Hz
RASP5-2…	2.4 A	0.75 kW	1 HP
RASP5-4…	4.3 A	1.5 kW	2 HP
RASP5-5…	5.6 A	2.2 kW	3 HP
RASP5-8…	8.5 A	4.0 kW	5 HP

PIN	400 V AC/460 V AC M 3~	ϑ	180 V DC / 230 V AC / 400 V AC / 277 V AC
1	U		
●			
3	W		
4			B2
5		T1	
6			B1
7	V		
8		T2	
PE	PE		

07/22 IL034093ZU

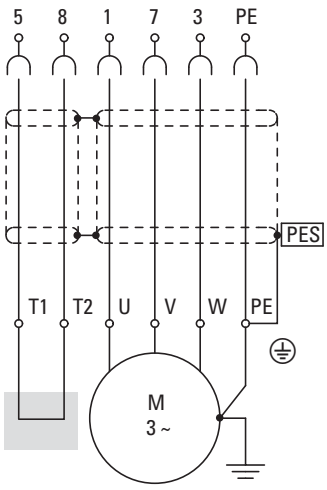

RASP5-…

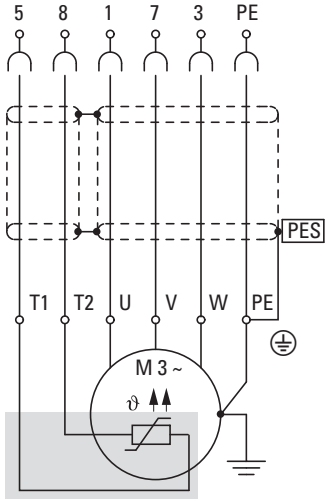

RASP5-…

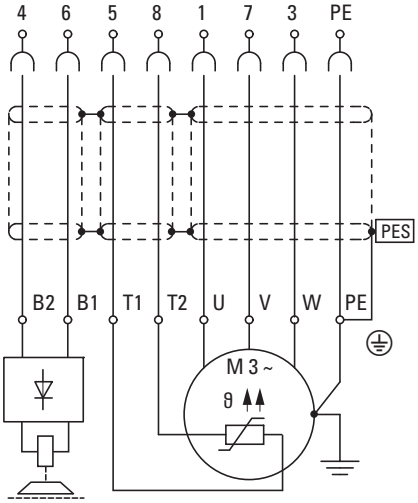

RASP5-xxx1…, RASP5-xxx2…,RASP5-xxx4…

(en) **Motor connection plug**
(de) **Motoranschlussstecker**
(fr) **Fiche de connexion du moteur**
(es) **Cable de conexión del motor**
(it) **Spina di collegamento motore**
(zh) **电机连接插头**
(ru) **Штекерный разъем электродвигателя**
(nl) **Motoraansluitstekker**
(da) **Motortilslutningsstik**
(el) **Βύσμα σύνδεσης κινητήρα**
(pt) **Ficha de junção do motor**
(sv) **Kontakt för motoranslutning**
(fi) **Moottorin liitinpistoke**
(cs) **Připojovací zástrčka motoru**
(et) **Mootori ühenduspistik**
(hu) **Motorcsatlakozó dugó**
(lv) **Motora savienošanas spraudnis**
(lt) **Variklio jungiamasis kištukas**
(pl) **Przyłącze silnika**
(sl) **Vtič za priključitev motorja**
(sk) **Zástrčka na pripojenie motora**
(bg) **Свързващ куплунг на мотора**
(ro) **Mufă conexiune motor**
(hr) **Priključni utikač motora**
(tr) **Motor bağlantı fişi**
(sr) **Прикључни утикач мотора**
(no) **Motortilkoblingsplugg**
(uk) **Штекер для підключення електродвигуна**
(ar) **مقبـــس توصـــيل المحـــرك**

RASP-CM2-2M0
RASP-CM2-5M0
RASP-CM2-10M



(en) Metal housing – (de) Metallgehäuse – (fr) Boîtier métallique – (es) Carcasa metálica – (it) Custodia metallica – (zh) 金属外壳 – (ru) Металлический корпус – (nl) Metalen behuizing – (da) Metalhus – (el) Μεταλλικό περίβλημα – (pt) Alojamento em metal – (sv) Metallkapsling – (fi) Metallikotelo – (cs) Kovové pouzdro – (et) Metallkorpus – (hu) Fémház – (lv) Metāla korpuss – (lt) Variklio gaubtas – (pl) Metalowa obudowa – (sl) Kovinsko ohišje – (sk) Kovové puzdro – (bg) Метален корпус – (ro) Carcasă din metal – (hr) Metalno kućište – (tr) Metal kasalı – (sr) Метално кућиште – (no) Metallkapsling – (uk) Металевий кожух – (ar) المبيـــت المعـــدني

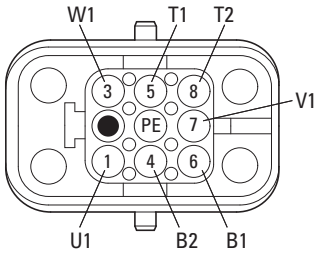

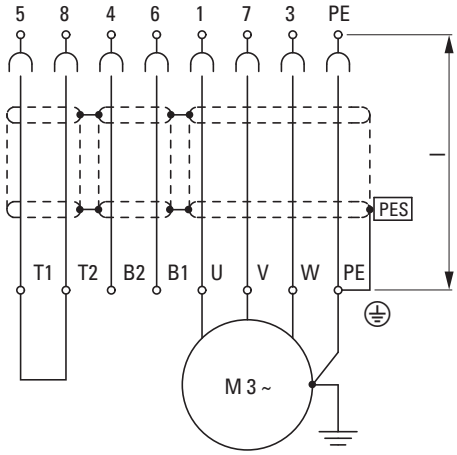

l = max. 20 m (max. 65.6 ft)
RASP-CM2-2M0 = **2 m** (6.56 ft)
RASP-CM2-5M0 = **5 m** (16.4 ft)
RASP-CM2-10M = **10 m** (32.81 ft)

(en) EMC correct installation of motor conductors – (de) EMV-gerechte Installation der Motorleitung – (fr) Conformité CEM du raccordement du câble moteur – (es) Instalación del cable del motor según CEM – (it) Installazione conforme alle norme CEM del cavo motore – (zh) 按照 EMV 规范安装电机电缆 – (ru) Монтаж проводки двигателя с соблюдением требований ЭМС – (nl) EMC-conforme installatie van de motorkabel – (da) EMC-korrekt installation af motorledningen – (el) Εγκατάσταση αγωγού κινητήρα σύμφωνα με τις απαιτήσεις ΗΜΣ – (pt) Instalação do cabo do motor em conformidade com CEM– (sv) EMC-anpassad installation av motorledningen – (fi) EMC-mukainen moottorin ohjauslaitteen asennus – (cs) Instalace vedení motoru v souladu se směrnicí o elektromagnetické kompatibilitě EMC – (et) Mootorikaabli elektromagnetilisele ühilduvusele vastav installeerimine – (hu) A motorvezeték EMV-nek megfelelő installációja – (lv) Motora vada montāža, ievērojot EMS direktīvas prasības – (lt) Variklio laido instaliacija pagal EMS reikalavimus – (pl) Instalacja przewodu silnikowego zgodna z przepisami w sprawie zgodności elektromagnetycznej – (sl) Namestitev motorskega kabla skladno s predpisi o elektromagnetni združljivosti – (sk) Elektromagnetická kompatibilita - správna inštalácia vedení motora – (bg) Монтаж на двигателния проводник в съответствие с изискванията на EMC – (ro) Instalarea conformă CEM a cablului motor – (hr) Instalacija vodova motora kompatibilna s EMC-om – (tr) Motor iletkenlerinin EMC doğru kurulumu – (sr) EMC исправна инсталација проводника мотора – (no) EMC-riktig installasjon av motorledere – (uk) Прокладання проводів двигуна відповідно до вимог EMC – (ar) التركيـــب الصـــحيح المطـــابق للتوافـــق الكهرومغناطيســـي لموصـــلات المحـــرك

07/22 IL034093ZU

1

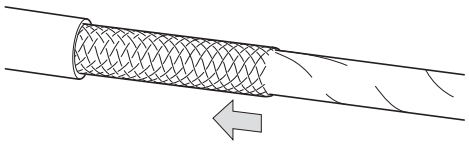

2

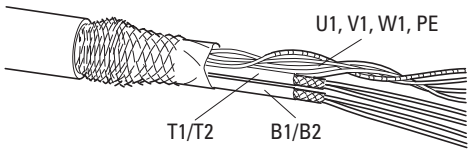

3

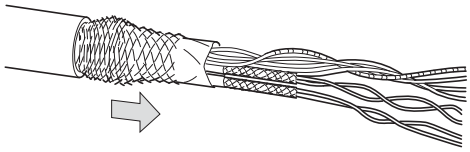

4

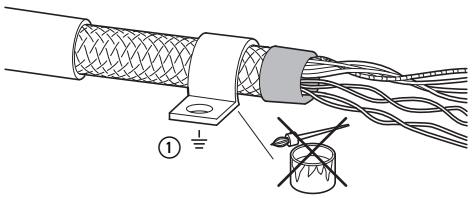

① PES 360°

(en) Contacting – (de) Kontaktierung – (fr) Liaison électrique – (es) Conexión – (it) Formazione dei contatti – (zh) 接触 – (ru) Контакты – (nl) Contact – (da) Kontaktering – (el) Επαφές – (pt) Contacto – (sv) Kontakta – (fi) Liitäntä – (cs) Napojen kontaktů – (et) Kontaktid – (hu) Kontaktálás – (lv) Kontakta izveide – (lt) Kontaktavimas – (pl) Kontaktowanie – (sl) kontaktiranje – (sk) Vytvorenie kontaktu – (bg) Контакт – (ro) Contactare – (hr) Kontaktiranje – (tr) Temas etme – (sr) Контактирање – (no) Kontakter – (uk) Контакт – (ar) التلامـــس

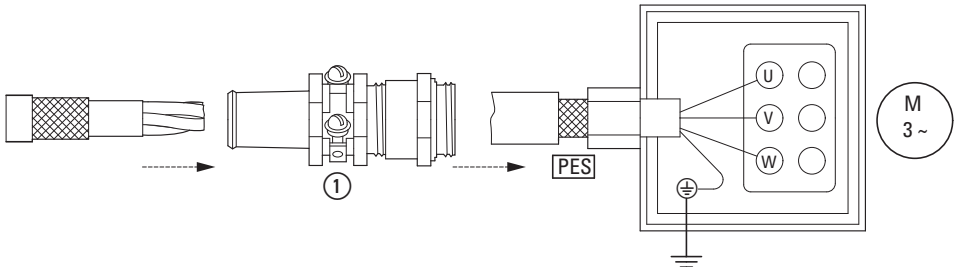

RASP5-xxx1…

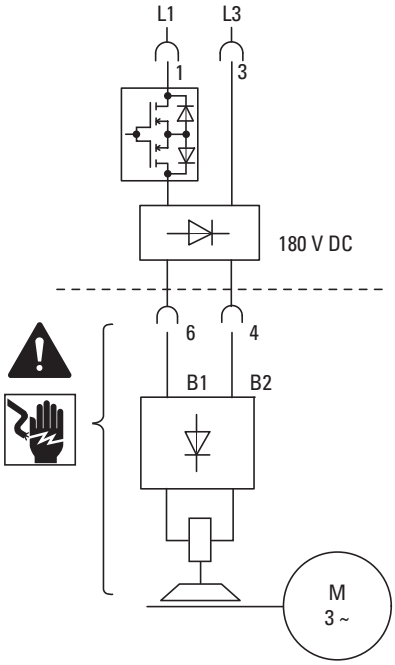

RASP5-xxx2…

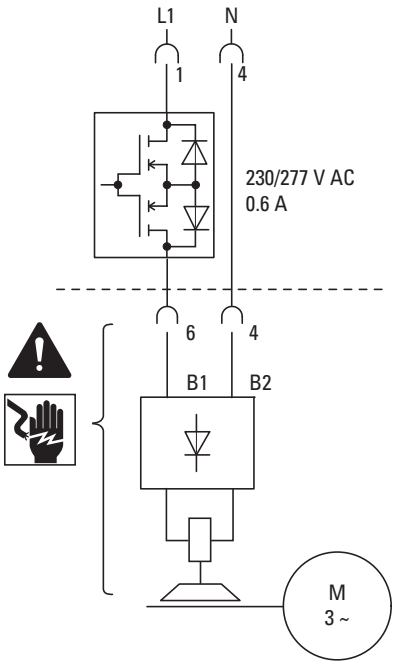

RASP5-xxx4…

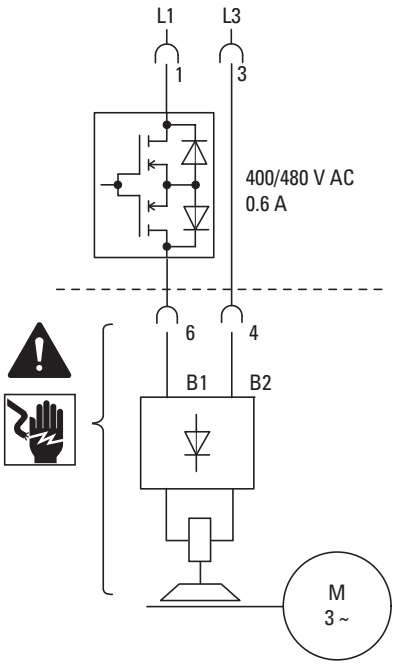

RASP5-…-xxxR…

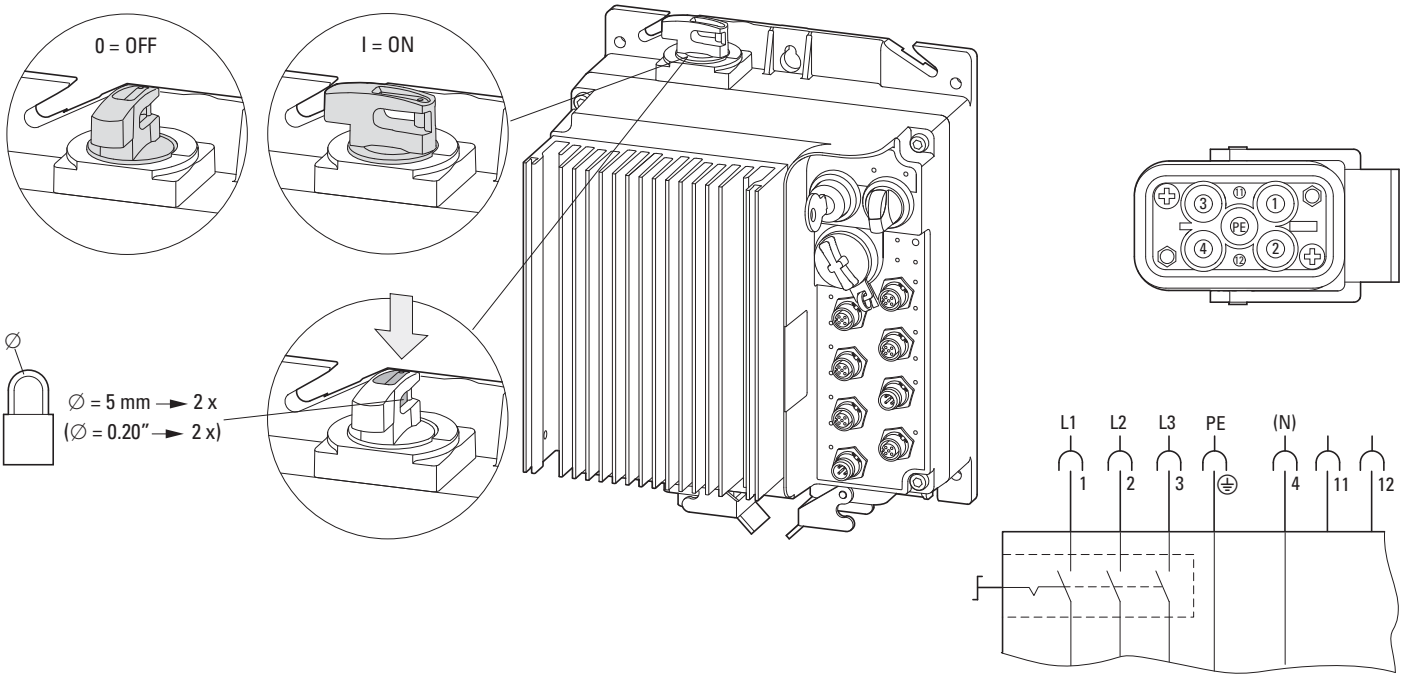

07/22 IL034093ZU

RASP-FAN-S1

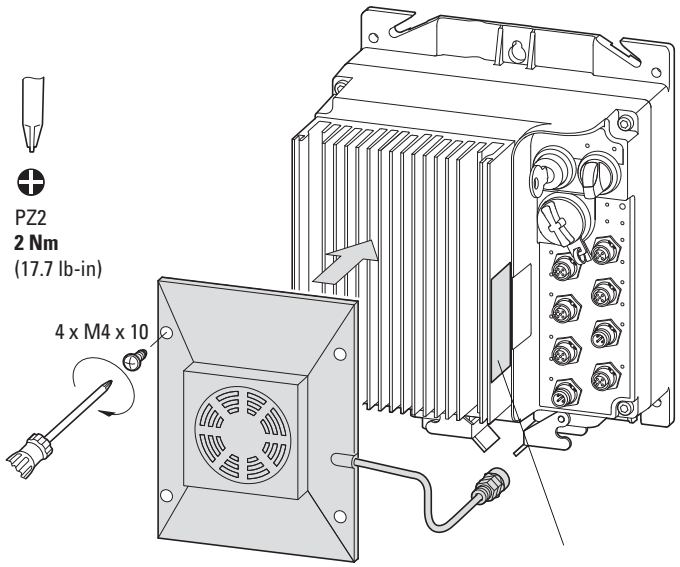

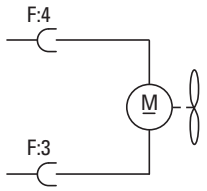

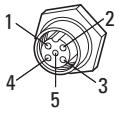

1	-
2	-
3	0 V
4	⎍ +24 V
5	–



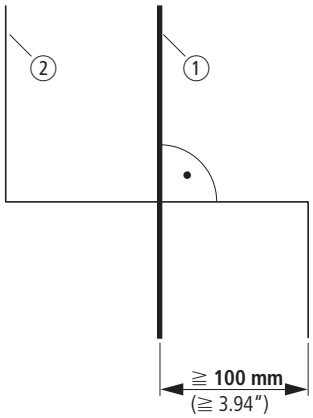

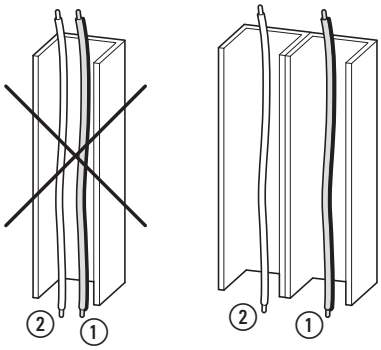

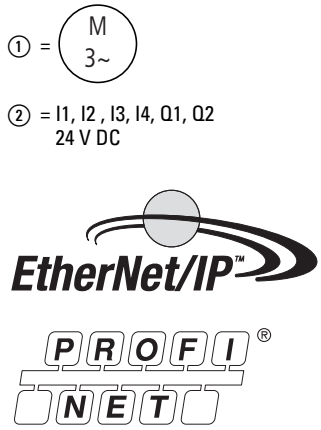

07/22 IL034093ZU

M12

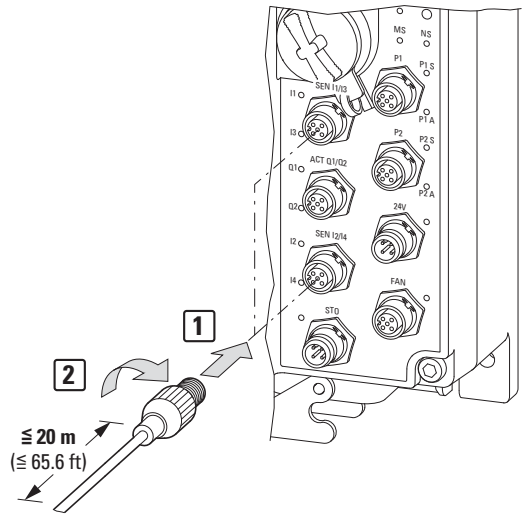

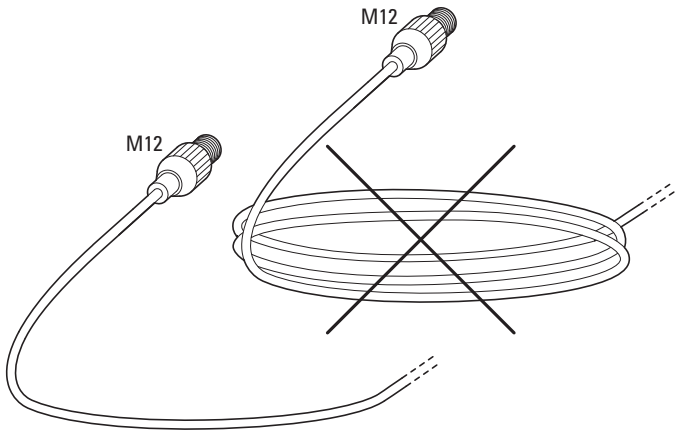

P1, P2

(en) "D" coded – (de) „D"-kodiert – (fr) Codage « D » – (es) Con código "D" – (it) Con codifica "D" – (zh) 已编码为 "D" – (ru) Кодирование "D" – (nl) "D"-gecodeerd – (da) „D"-kodet – (el) Με κωδικοποίηση „D" – (pt) Com código "D" – (sv) "D"-koderad – (fi) "D"-koodattu – (cs) Kódování „D" – (et) "D"-kodeeritud – (hu) „D" kódolású – (lv) "D"kodēts – (lt) „D" kodavimo – (pl) Kodowany "D" – (sl) "D" kodirano – (sk) "D" - kód – (bg) Кодиране "D" – (ro) Codat "D" – (hr) „D" kodirano – (tr) "D" kodlu – (sr) „D" кодирано – (no) D-kodet – (uk) Код D – (ar) "د" مـــرمّز

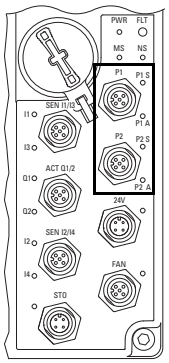

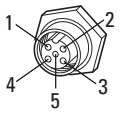

1	TD+
2	RD+
3	TD-
4	RD-
5	⏚

EtherNet/IP™

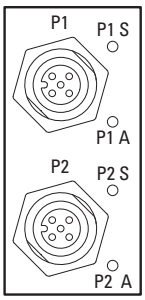

PROFINET

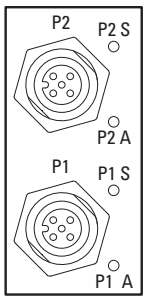

SEN: I1, I2, I3, I4

(en) "A" coded – (de) „A"-kodiert – (fr) Codage « A » – (es) Con código "A" – (it) Con codifica "A" – (zh) 已编码为 "A" – (ru) Кодирование "A" – (nl) "A"-gecodeerd – (da) „A"-kodet – (el) Με κωδικοποίηση „A" – (pt) Com código "A" – (sv) "A"-koderad – (fi) "A"-koodattu – (cs) Kódování „A" – (et) "A"-kodeeritud – (hu) „A" kódolású – (lv) "A"kodēts – (lt) „A" kodavimo – (pl) Kodowany "A" – (sl) "A" kodirano – (sk) "A" - kód – (bg) Кодиране "A" – (ro) Codat "A" – (hr) „A" kodirano – (tr) "A" kodlu – (sr) „A" кодирано – (no) A-kodet – (uk) Код A – (ar) "أ" مـــرمّز"

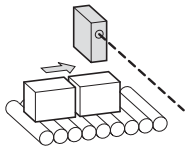

→ DIN IEC 304, DIN IEC 757		
1	BN	1
2	WH	9
3	BU	6
4	BK	0
5	–	–

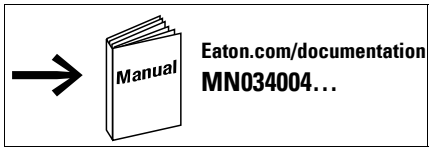

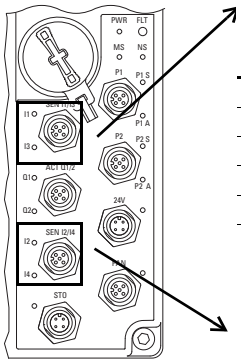

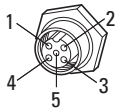

1	L+
2	⎍ I3
3	L-
4	⎍ I1
5	–

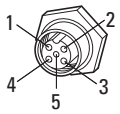

1	L+
2	⎍ I4
3	L-
4	⎍ I2
5	–

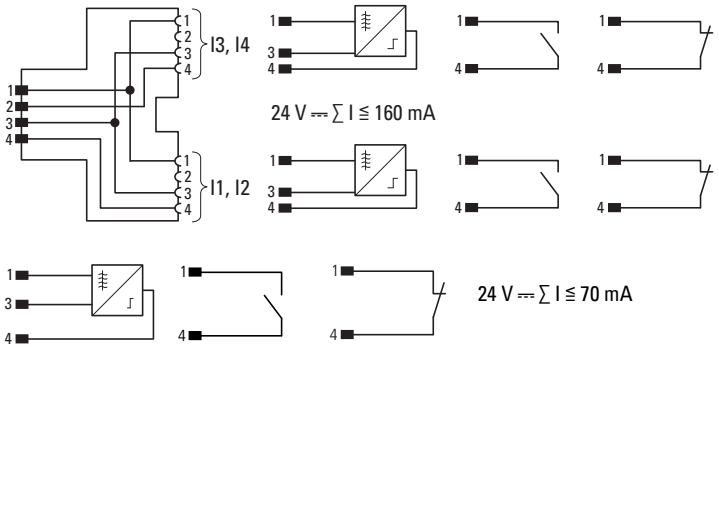

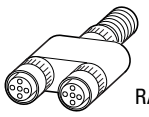

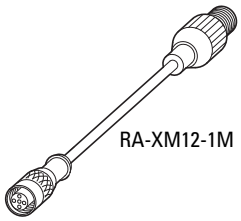

07/22 IL034093ZU

ACT: Q1, Q2

(en) "B" coded – (de) „B"-kodiert – (fr) Codage « B » – (es) Con código "B" – (it) Con codifica "B" – (zh) 已编码为 "B" – (ru) Кодирование "B" – (nl) "B"-gecodeerd – (da) „B"-kodet – (el) Με κωδικοποίηση „B" – (pt) Com código "B" – (sv) "B"-koderad – (fi) "B"-koodattu – (cs) Kódování „B" – (et) "B"-kodeeritud – (hu) „B" kódolású – (lv) "B"kodēts – (lt) „B" kodavimo – (pl) Kodowany "B" – (sl) "B" kodirano – (sk) "B" - kód – (bg) Кодиране "B" – (ro) Codat "B" – (hr) „B" kodirano – (tr) "B" kodlu – (sr) „B" кодирано – (no) B-kodet – (uk) Код B – (ar) "ب" مــرمّز

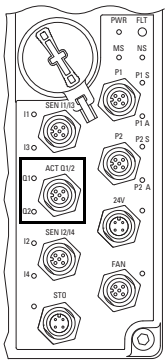

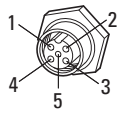

1	0 V	Q2
2	+24 V DC	Q2 (≦ 1 A)
3	0 V	Q1
4	+24 V DC	Q1 (≦ 1 A)
5	–	

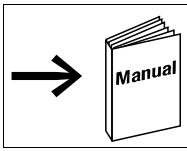

Eaton.com/documentation
MN034004…

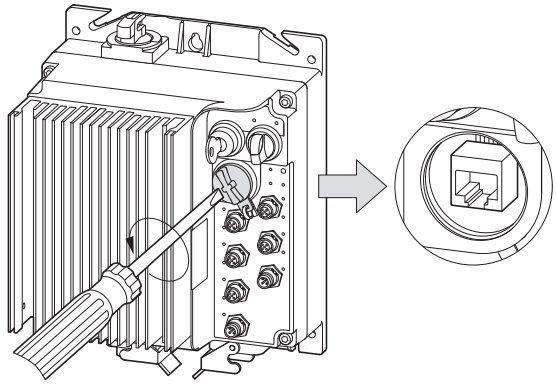

M32 x 1.5
2 Nm (17.7 lb-in)

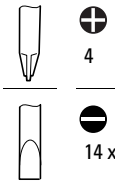

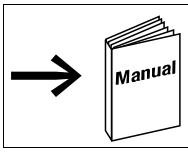

Eaton.com/documentation
MN034004…

RJ 45 plug

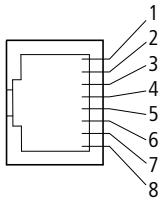

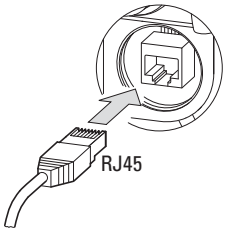

DX-CBL-PC-3M0
DX-KEY-OLED
DX-KEY-LED2
DX-COM-STICK3-KIT

Eaton.com/documentation



DX-KEY-OLED, DX-KEY-LED2
IL04012020Z

DX-CBL-PC-3M0
IL040025ZU

DX-COM-STICK3-KIT
IL040051ZU

DX-CBL-PC-3M0

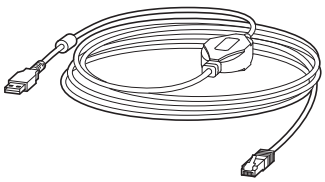

DX-KEY-OLED

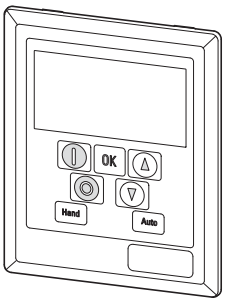

DX-KEY-LED2

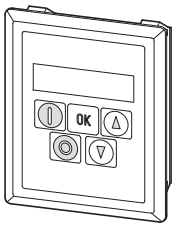

DX-COM-STICK3-KIT

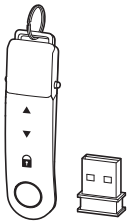

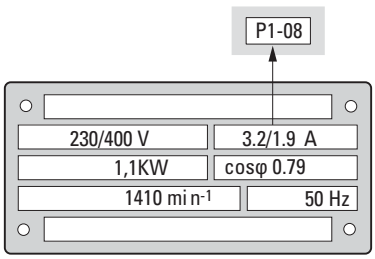

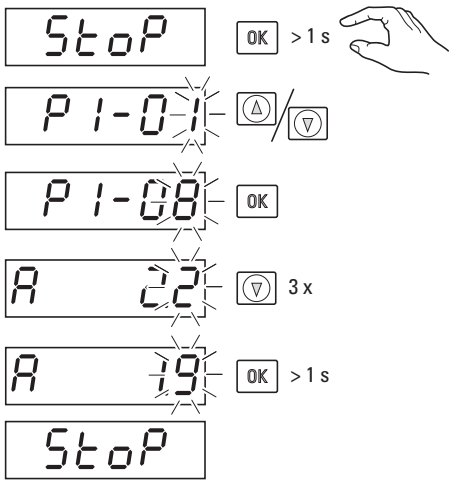

07/22 IL034093ZU

24 V

(en) **External 24 V DC control voltage**
(de) **Externe 24 V DC Steuerspannung**
(fr) **Tension de commande externe 24 V DC**
(es) **Tensión de control externa 24 V DC**
(it) **Tensione di comando esterna 24 V DC**
(zh) **外部控制电压 24 V DC**
(ru) **Внешнее управляющее напряжение 24 В пост. Тока**
(nl) **Externe stuurspanning 24 V DC**
(da) **Ekstern styrespænding 24 V DC**
(el) **Τάση εξωτερικού ελέγχου 24 V DC**
(pt) **Tensão de controlo externa 24 V DC**
(sv) **Extern styrspänning 24 V DC**
(fi) **Ulkoinen ohjausjännite 24 V DC**
(cs) **Externí řídicí napětí 24 V DC**
(et) **Väline juhtimispinge 24 V DC**
(hu) **Külső vezérlőfeszültség 24 V DC**
(lv) **Ārējā vadības spriegums 24 V DC**
(lt) **Išorinė valdymo įtampa 24 V DC**
(pl) **Zewnętrzne napięcie sterowania 24 V DC**
(sl) **Zunanja krmilna napetost 24 V DC**
(sk) **Externé riadiace napätie 24 V DC**
(bg) **Външно управляващо напрежение 24 V DC**
(ro) **Tensiune de control extern 24 V DC**
(hr) **Vanjski upravljački napon 24 V DC**
(tr) **Harici 24 V DC kumanda gerilimi**
(sr) **Спољни 24 V DC контролни напон**
(no) **Ekstern 24 V DC-styrespenning**
(uk) **Зовнішня напруга керування 24 В пост. струму**
(ar) **ولتيـــة التحكـــم فـــي التيـــار المســـتمر بقـــوة 24 فولت مـن مصـدر خـارجي**

(en) "A" coded – (de) „A"-kodiert – (fr) Codage « A » – (es) Con código "A" – (it) Con codifica "A" – (zh) 已编码为 "A" – (ru) Кодирование "A" – (nl) "A"-gecodeerd – (da) „A"-kodet – (el) Με κωδικοποίηση „A" – (pt) Com código "A" – (sv) "A"-koderad – (fi) "A"-koodattu – (cs) Kódování „A" – (et) "A"-kodeeritud – (hu) „A" kódolású – (lv) "A"kodēts – (lt) „A" kodavimo – (pl) Kodowany "A" – (sl) "A" kodirano – (sk) "A" - kód – (bg) Кодиране "A" – (ro) Codat "A" – (hr) „A" kodirano – (tr) "A" kodlu – (sr) „A" кодирано – (no) A-kodet – (uk) Код A – (ar) "مـــرمز "أ"

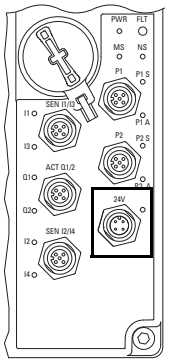

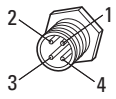

1	–
2	–
3	0 V
4	+24 V DC

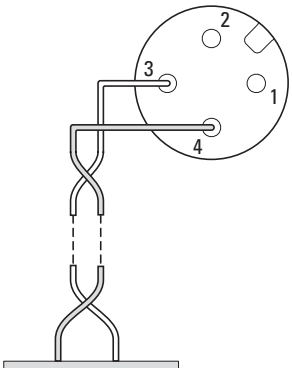

(en) PC interfacing – (de) PC-Anschaltung – (fr) Interface PC – (es) Conexión PC – (it) Collegamento al PC – (zh) PC– 接通电路 – (ru) Подключение ПК – (nl) PC-aansluiting – (da) Indkobling af PC – (el) Εκκίνηση Η/Υ – (pt) Conexão de PC – (sv) PC-anslutning – (fi) PC-kytkentä – (cs) Napojení PC – (et) Arvuti juurdelülitamine – (hu) PC csatlakoztatás – (lv) PC pieslēgums – (lt) PC prijungimas – (pl) Podłączenie do komputera PC – (sl) PC-vklop – (sk) Zapnutie PC – (bg) Включване на компютъра – (ro) Conectare la PC – (hr) Računalno sučelje – (tr) PC arayüzü – (sr) Рачунарски интерфејс – (no) PC-grensesnitt – (uk) Інтерфейс для ПК – (ar) توصـــيل الكمبيوتـــر الشخصـــي

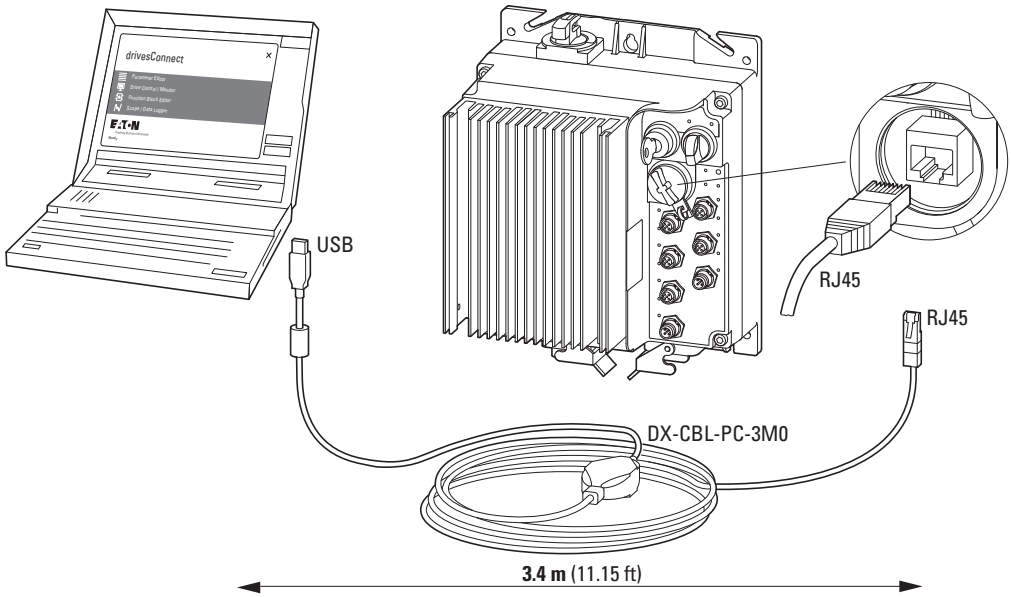

Eaton.eu/software
→ Driver
→ DrivesConnect

07/22 IL034093ZU

STO

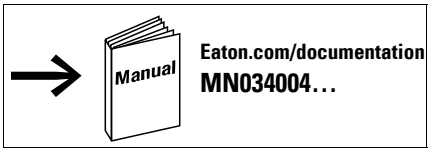

(en) STO with **external** supply
(de) STO mit **externer** Versorgung
(fr) STO avec alimentation **externe**
(es) Función Safe Torque Off (STO) con suministro **externo**
(it) STO con alimentazione **esterna**
(zh) 安全转矩关闭 (STO), 带外部电源
(ru) Безопасное отключение крутящего момента с **внешним** источником питания
(nl) STO met **externe** voeding
(da) Sikkert frakoblet moment med **ekstern** strømforsyning
(el) STO με **εξωτερική** τροφοδοσία
(pt) Binário de segurança desligado (STO) com alimentação **externa**
(sv) STO (säkert frånkopplat vridmoment) med **extern** försörjning
(fi) STO, **ulkoinen** syöttö
(cs) Funkce STO s **externím** zdrojem
(et) STO (ohutu pöördemomendi väljalülitamine) **välise** toitega
(hu) STO **külső** táppal
(lv) STO (droša griezes momenta izslēgšana) ar **ārējo** barošanas avotu
(lt) STO (saugus variklio momento išjungimas) su **išoriniu** maitinimu
(pl) Bezpieczne wyłączenie momentu obrotowego (STO) z **zewnętrznym** zasilaniem
(sl) Komponenta s funkcijo STO z **zunanjim** napajanjem
(sk) STO (bezpečne vypnutý krútiaci moment) s **externým** napájaním
(bg) STO с **външно** захранване
(ro) Cuplu sigur dezactivat cu alimentare **externă**
(hr) STO (sigurnosni isklop momenta) s **vanjskim** napajanjem
(tr) **Harici** besleme ile STO
(sr) STO са спољним напајањем
(no) STO med ekstern forsyning
(uk) Механізм STO із **зовнішнім** живленням
(ar) مع إمداد خارجي STO

(en) STO with **internal** supply
(de) STO mit **interner** Versorgung
(fr) STO avec alimentation **interne**
(es) Función Safe Torque Off (STO) con suministro **interno**
(it) STO con alimentazione **interna**
(zh) 安全转矩关闭 (STO), 带内部电源
(ru) Безопасное отключение крутящего момента с **внутренним** источником питания
(nl) STO met **interne** voeding
(da) Sikkert frakoblet moment med **intern** strømforsyning
(el) STO με **εσωτερική** τροφοδοσία
(pt) Binário de segurança desligado (STO) com alimentação **interna**
(sv) STO (säkert frånkopplat vridmoment) med **intern** försörjning
(fi) STO, **sisäinen** syöttö
(cs) Funkce STO s **interním** zdrojem
(et) STO (ohutu pöördemomendi väljalülitamine) **sisemise** toitega
(hu) STO **belső** táppal
(lv) STO (droša griezes momenta izslēgšana) ar **iekšējo** barošanas avotu
(lt) STO (saugus variklio momento išjungimas) su **vidiniu** maitinimu
(pl) Bezpieczne wyłączenie momentu obrotowego (STO) z **wewnętrznym** zasilaniem
(sl) Komponenta s funkcijo STO z **notranjim** napajanjem
(sk) STO (bezpečne vypnutý krútiaci moment) s vnútorným napájaním
(bg) STO с **вътрешно** захранване
(ro) Cuplu sigur dezactivat cu alimentare **internă**
(hr) STO (sigurnosni isklop momenta) s **internim** napajanjem
(tr) **Dahili** besleme ile STO
(sr) STO са унутрашњим напајањем
(no) STO med intern forsyning
(uk) Механізм STO з **внутрішнім** живленням
(ar) مع إمداد داخلي STO

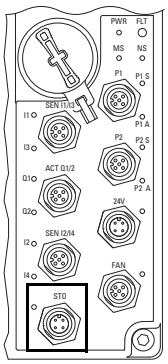

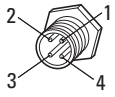

1	+24 V
2	0 V
3	STO- 0V
4	STO+ 24 V

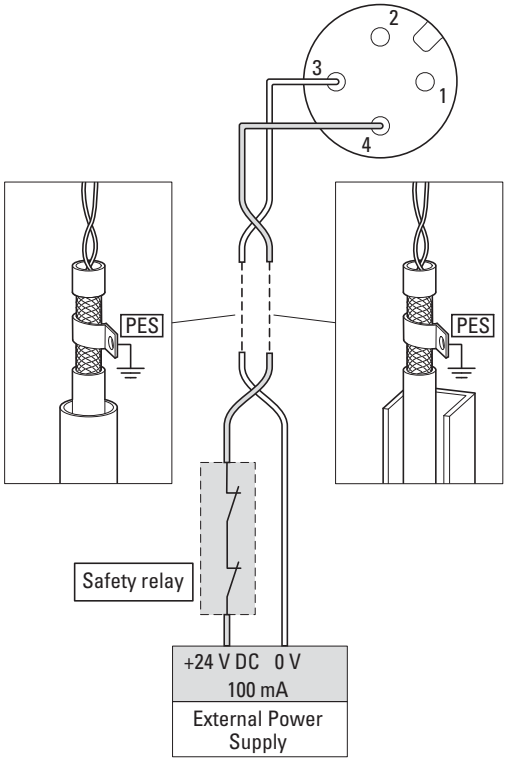

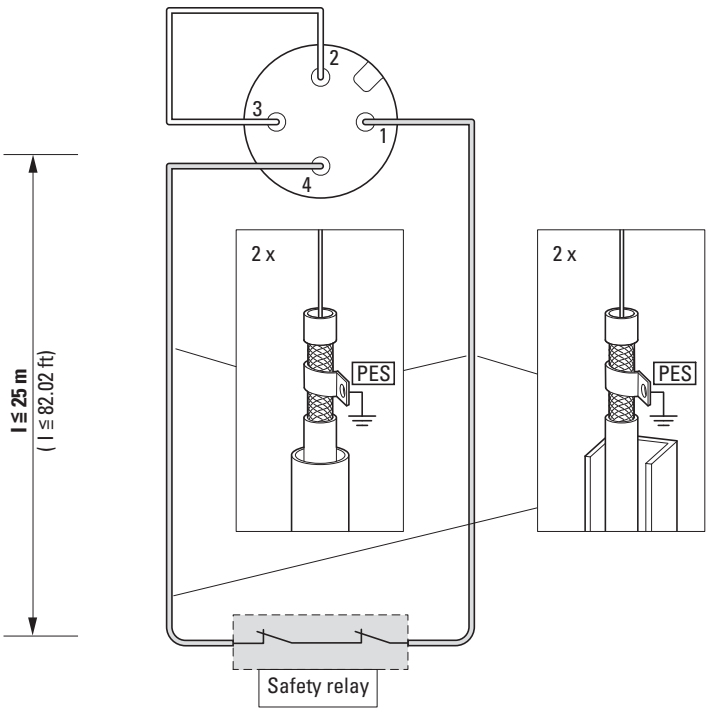

07/22 IL034093ZU

RASP5-…

3~ 380 - 480 V, N, PE, 50/60 Hz

① RASP5-…-xxxR…
② RASP5-xxx1… (180 V DC)
RASP5-xxx2… (230/277 V)
RASP5-xxx3… (400/480 V)
③ RASP5-…-xxxxxx1xx (FAN)
④ RASP5-…-xxxx1… (Brake resistor)
⑤ RASP5-…-xxxxx1xxx (STO)
⑥ RASP5-xxx1… (180 V DC), RASP5-xxx2… (230/277 V) **only**

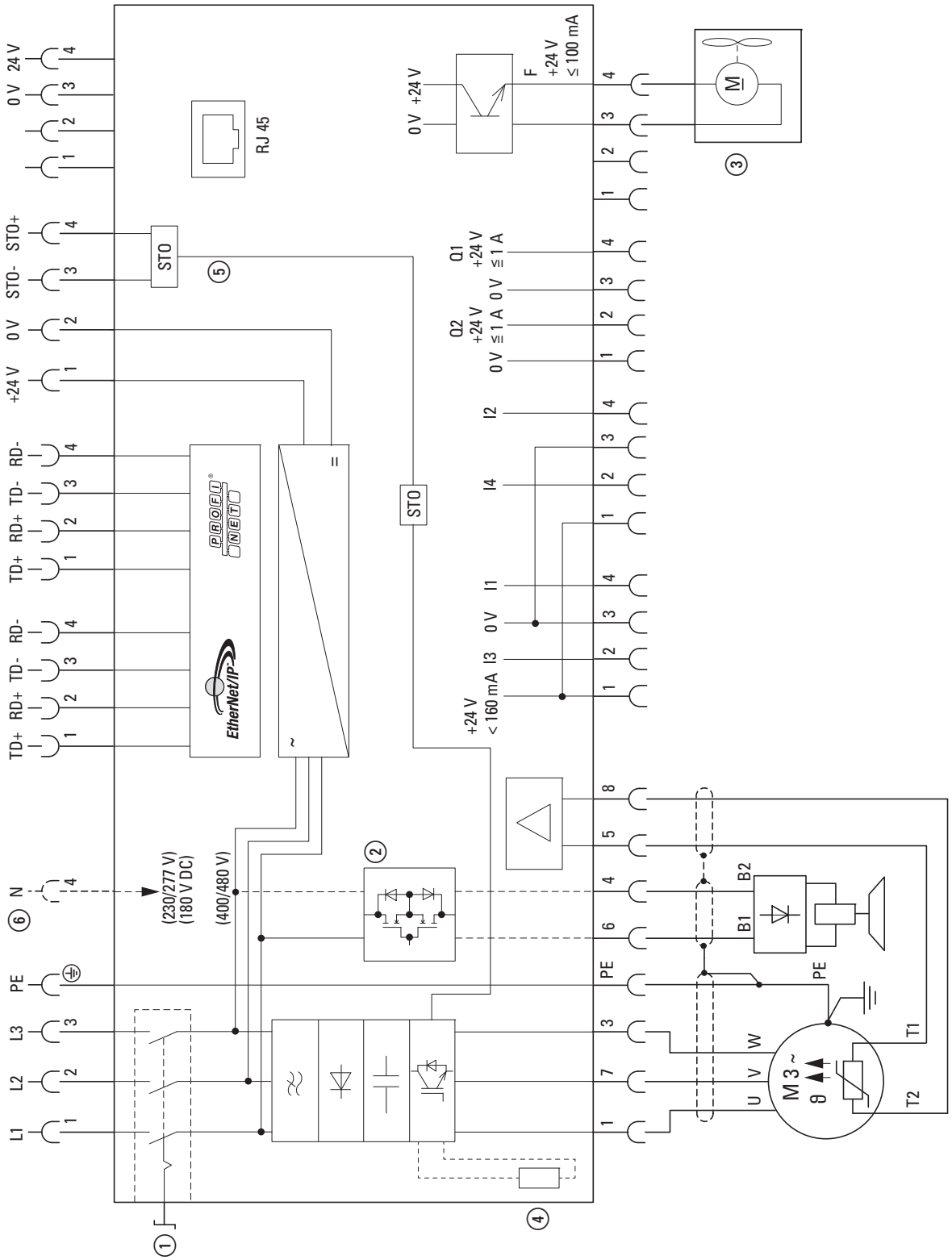

07/22 IL034093ZU

Doc. No.: CE2200041

EU-Konformitätserklärung

EU declaration of conformity

Wir / We, Eaton Industries GmbH, 53105 Bonn, Germany,
Hein-Moeller-Str. 7-11, 53115 Bonn, Germany

erklären hiermit in alleiniger Verantwortung als Hersteller, dass das Produkt (die Produktfamilie)
declare under our sole responsibility as manufacturer that the product (family)

Drehzahlsteller RASP5 (mit STO)
Speed Control Unit RASP5 (with STO)

entsprechend der Auflistung auf Seite 2 den einschlägigen Bestimmungen der Richtlinie(n) des Rates entspricht:
according to the list on page 2 complies with the provisions of Council directive(s):

2014/30/EU	***EMV-Richtlinie** / EMC Directive*
2011/65/EU	***RoHS-Richtlinie** / RoHS Directive*
2006/42/EC	***Maschinenrichtlinie** / Machinery Directive*
2009/125/EC	***Ökodesignrichtlinie** / Ecodesign Directive (Verordnung / Regulation 2019/1781)*

und mit den folgenden Normen übereinstimmt:
based on compliance with the following standard(s):

EN 61800-5-1:2007 + A1:2017 + A11:2021 1)	**EN 61508-1:2010**
EN 61800-5-2:2017	**EN 61508-2:2010**
EN 62026-2:2013 + A1:2019 2)	**EN 61508-4:2010**
EN 62061:2005 + A1:2013 + A2:2015 + AC:2010	**EN 61508-5:2010**
EN IEC 61800-3:2018	**EN 61508-6:2010**
EN IEC 63000:2018	**EN 61508-7:2010**
EN ISO 13849-1:2015	**EN 61800-9-2:2017**

1) in extracts
2) only for products with AS-Interface

Bonn, 04.07.2022

i.A. Edgar Willems
Manager Quality Business Line ICP
Power Management & Control Components Division

i.A. Lars Gundlach
Head of Product Line Management
Controls & Automation

Doc. No.: CE2200041

Typen des Sortiments

Types within the range

Die Konformitätserklärung gilt für folgende Typen der Produktfamilie und in Kombination mit den darunter folgenden Produkten:
The declaration of conformity applies to the following types within the product family and in combination with products listed below:

RASP5-XXXXXXX-XXXXX1XXX

Die Übereinstimmung eines Baumusters des bezeichneten Produktes mit der Richtlinie
Consistency of a production sample with the marked product in accordance with the Directive
Maschinenrichtlinie 2006/42/EG / Machinery Directive 2006/42/EC

wurde bescheinigt durch
has been certified by

Notifizierte Stelle / Anschrift: NB 0035-TÜV Rheinland, Am Grauen Stein, 51105 Köln/ Germany
Notified Agency / Address:

Nummer der Bescheinigung: 01/205/5747.00/19
Certification Number:

Ausstellungsdatum: 2019-12-17
Date of issue:

Das bezeichnete Produkt stimmt mit dem geprüften Baumuster überein.
The designated product is consistent with the examined type

Zusatzbemerkungen / Supplementary Notes:

Only the “Safe Torque Off” (STO) function of the drive may be used as a safety function of a machine. None of the other functions of the drive can be used to carry out a safety function.

Bevollmächtigter zur Zusammenstellung der technischen Unterlagen / Authorised Person to compile the technical file:
Eaton Industries GmbH, Hein-Moeller-Str. 7-11, 53115 Bonn, Germany

Bonn, 04.07.2022

i.A. Edgar Willems
Manager Quality Business Line ICP
Power Management & Control Components Division

i.A. Lars Gundlach
Head of Product Line Management
Controls & Automation

Doc. No.: UK2200114

Declaration of conformity

We, Eaton Industries GmbH, 53105 Bonn, Germany,
Hein-Moeller-Str. 7-11, 53115 Bonn, Germany

declare under our sole responsibility as manufacturer that the product (family)

Speed Control Unit RASP5 (with STO)

according to the list on page 2 and provided that it is installed, maintained and used in the application intended for, with respect to the relevant manufacturer´s instructions, installation standards and "good engineering practices", complies with the statutory requirements:

2016 No. 1091 ***The Electromagnetic Compatibility Regulations 2016***

2012 No. 3032 ***RoHS in Electrical and Electronic Equipment Regulations 2012***

2008 No. 1597 ***The Supply of Machinery (Safety) Regulations 2008***

based on compliance with the following standard(s):

EN 61800-5-1:2007 + A1:2017 + A11:2021 **EN 61800-9-2:2017**

EN 61800-5-2:2017

EN 62026-2:2013 + A1:2019 1)

EN 62061:2005 + A1:2013 + A2:2015 + AC:2010

EN IEC 61800-3:2018

EN IEC 63000:2018

EN ISO 13849-1:2015

EN 61508-1:2010

EN 61508-2:2010

EN 61508-4:2010

EN 61508-5:2010

EN 61508-6:2010

EN 61508-7:2010

1) only for products with AS-Interface

Bonn, 06.07.2022

i.A. Edgar Willems
Manager Quality Business Line ICP
Power Management & Control Components Division

i.A. Lars Gundlach
Head of Product Line Management
Controls & Automation

Powering Business Worldwide

Doc. No.: UK2200114

Types within the range

The declaration of conformity applies to the following types within the product family and in combination with products listed below:

RASP5-XXXXXXX-XXXXX1XXX

Consistency of a production sample with the marked product in accordance with the Directive

The Supply of Machinery (Safety) Regulations 2008 No. 1597

has been certified by

Notified Agency / Address: UKAB 2571-TÜV Rheinland UK Ltd.,
Friars Gate, 1011Stratford Road, Shirley, Solihull

Certification Number: 01/205U/5747.00/22 **Date of issue:** 2022-05-12

The designated product is consistent with the examined type.

Supplementary Notes
Only the “Safe Torque Off” (STO) function of the drive may be used as a safety function of a machine.
None of the other functions of the drive can be used to carry out a safety function.

Authorised Person to compile the technical file:
Eaton Industries GmbH, Hein-Moeller-Str. 7-11, 53115 Bonn, Germany

Bonn, 06.07.2022

i.A. Edgar Willems
Manager Quality Business Line ICP
Power Management & Control Components Division

i.A. Lars Gundlach
Head of Product Line Management
Controls & Automation

Powering Business Worldwide

UL® Cautions, Warnings and Instructions

UL® File: E253552
UL61800-5-1
CSA C22.2 No 274

USA: ULus

Indicates Investigated to United States Standard UL61800-5-1 - Listed.

Canada: cUL

Indicates Investigated to Canadian Standard CSA 22.2 No.274 - Listed

General

- These devices are solid state variable/speed ac drive inverters which convert a fixed frequency three phase input voltage to a 3-phase, variable frequency, variable voltage output. The inverter automatically maintains the required volts-Hz ratio allowing the ac motor to run at its optimum efficiency and provide constant torque capability through the motor speed range.
- The power conversion equipment provides solid state motor overload protection.
- Over-Current function was evaluated. Maximum current limit is 150 percent of FLC. The adjustable range is 0 to 150 percent of FLC.
- Drive is provided with solid state short circuit protection circuitry which is the same throughout the series. Current sensing is accomplished by monitoring the DC bus and/or all the motor outputs.
- These drives or control units have not been evaluated as providing a safety or limiting feature.
- The devices use the supplied thermocouple in the IGBT packs to control thermal functions – 100 % production test used to confirm functionality.
- These devices are for installation in overvoltage category III and pollution degree 3.
- Auxiliary control outputs intended to drive resistive load.

Electrical ratings

Model – 400 V Range		Input (3-phase)	Output (3-phase)		
Frame Size	Model number	FLA	FLA	Power kW	Power HP
1A	RASP5-2…	2.4	2.4	0.75	1.0
1A	RASP5-3…	3.3	3.3	1.1	1.5
1A	RASP5-4…	4.3	4.3	1.5	2.0
1A	RASP5-5…	5.6	5.6	2.2	3.0
1B	RASP5-6…	6.8	6.8	3.0	4.0
1B	RASP5-8…	8.5	8.5	4.0	5.0

Frame size 1A = no external fan fitted.
Frame size 1B = external fan fitted.
Input voltage 380 - 480/277 V AC, 50/60 Hz
Output voltage 20 - 500 V AC, 0 - 500 Hz

Terminals – All Models	Qty	Maximum ratings
Sensor supply	3	24 V 100 mA
Motor Brake	1	600 mA 400 V (6 A < 120 ms)

Short circuit rating

Model	Short circuit rating (kA) Fuses (J-Type)	Breakers (Type C) …When protected by
RASP5	100 kA	… Class J fuses
	10 kA	… Circuit breaker (Type C)
	65 kA	… Type E Combination Motor Controller
RASP5-…-xxxR (with repair switch)	10 kA	… Class J fuses
		… Circuit breaker (Type C)
		… Type E Combination Motor Controller

NOTICE

Suitable for use on a circuit capable of delivering not more than 100 000 rms symmetrical amperes, 480 volts maximum. Suitable for motor group installation. When protected by J class fuses rated 30 A.

Suitable for use on a circuit capable of delivering not more than 65 000 rms symmetrical amperes, 480 volts maximum. When protected by type E combination motor controller model PKZM4-32 manufactured by Eaton rated 480Y/277 V AC 20 HP.

Suitable for use on a circuit capable of delivering not more than 10 000 rms symmetrical amperes, 480 volts maximum. Suitable for motor group installation. When protected by a circuit breaker having an interrupting rating not less than 10 000 rms symmetrical amperes, 480 volts maximum, rated 32 A.

RASP5-…-xxxR (disconnect switch)

NOTICE

Suitable for use on a circuit capable of delivering not more than 10 000 rms symmetrical amperes, 480 volts maximum. Suitable for motor group installation. When Protected by J Class fuses rated 30 A.

Suitable for use on a circuit capable of delivering not more than 10 000 rms symmetrical amperes, 480 volts maximum. Suitable for motor group installation. When protected by circuit breaker having an interrupting rating not less than 10 000 rms symmetrical amperes, 480 volts maximum, rated 32 A.

Suitable for use on a circuit capable of delivering not more than 10 000 rms symmetrical amperes, 480 volts maximum. When protected by type E combination motor controller model PKZM4-32 manufactured by Eaton rated 480Y/277 V AC 20 HP.

Environmental ratings

- Maximum ambient air temperature: 55 °C
- Enclosure type 12

Further specifications and information

- Use copper conductors only
- 75 °C wire only
- Integral solid state short circuit protection does not provide branch circuit protection. Branch circuit protection must be provided in accordance with the National Electrical Code and any additional local codes or the equivalent.

WARNING

The opening of the branch-circuit protective device may be an indication that a fault has been interrupted. To reduce the risk of fire or electric shock, current-carrying parts and other components of the controller should be examined and replaced if damaged.

ATTENTION

THE OPENING OF THE BRANCH-CIRCUIT PROTECTIVE DEVICE MAY BE AN INDICATION THAT A FAULT HAS BEEN INTERRUPTED. TO REDUCE THE RISK OF FIRE OR ELECTRIC SHOCK, CURRENT-CARRYING PARTS AND OTHER COMPONENTS OF THE CONTROLLER SHOULD BE EXAMINED AND REPLACED IF DAMAGED. IF BURNOUT OF THE CURRENT ELEMENT OF AN OVERLOAD RELAY OCCURS, THE COMPLETE OVERLOAD RELAY MUST BE REPLACED.

07/22 IL034093ZU

© 2020 Eaton Industries GmbH

EU: Eaton Industries GmbH, Hein-Moeller-Straße 7-11, 53115 Bonn, Germany
UK: Eaton Electric Ltd., P.O. Box 554, Abbey Park, Southampton Road, Titchfield, PO14 4QA, United Kingdom
MA: اتون الكترك تقسيم ابنال6,شارع سقرآط, معاريف امتداد, طابق1, الرمزالبريدي 20370,الدار البيضاء.المغرب
USA: Eaton.com/eatoncare +1 877-386-2273
Eaton.com/contacts
Eaton.com/aftersales
Eaton.com/documentation