E40544

Gasket

SEAL RING FKM DN65

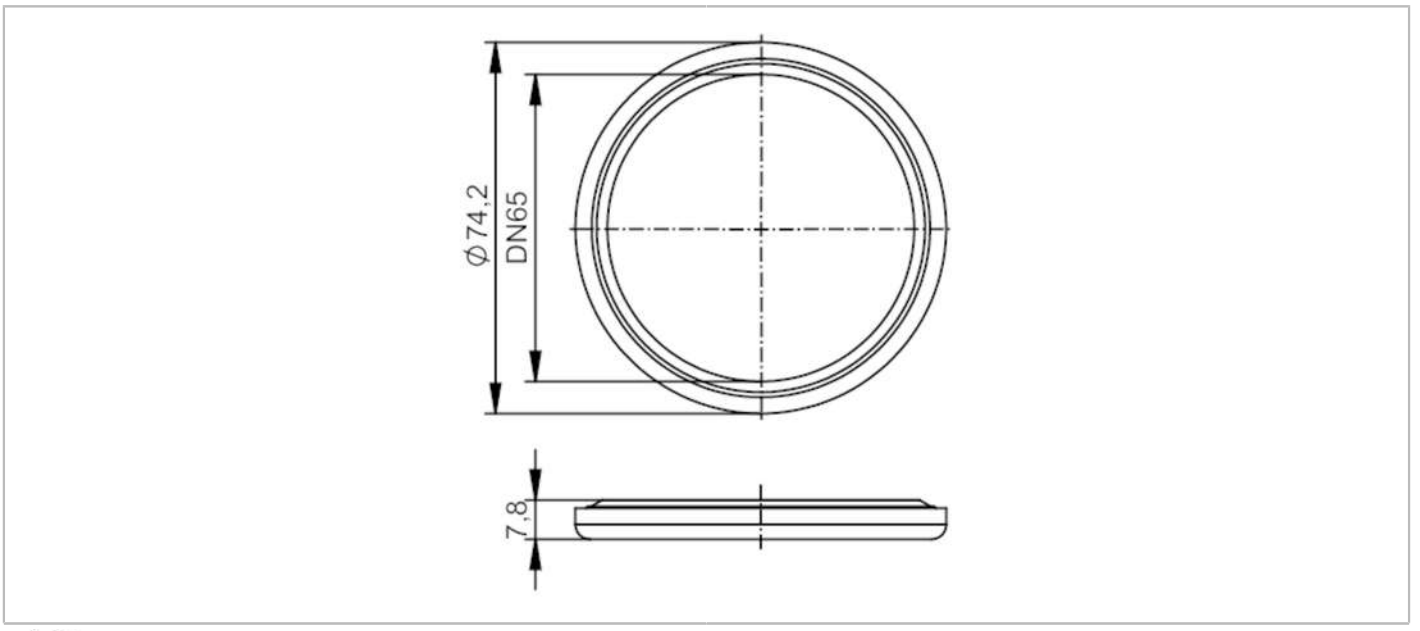

EC 1935/2004

Application		
Design		for volumetric flow meters SMF
Application		food and beverage industry; hygienic systems
Mechanical data		
Weight	[g]	31.9
Materials		FKM
Nominal diameter		DN65 (2 1/2“)
Remarks		
Pack quantity		2 pcs.