Brand of NTN corporation

Technical data

UCFE208N

Bearing units



Grey cast housing, radial insert ball bearing with socket set screws,seal with slinger

KIT CONTENT

UC.208.G2, FE208N

VISUAL (S)

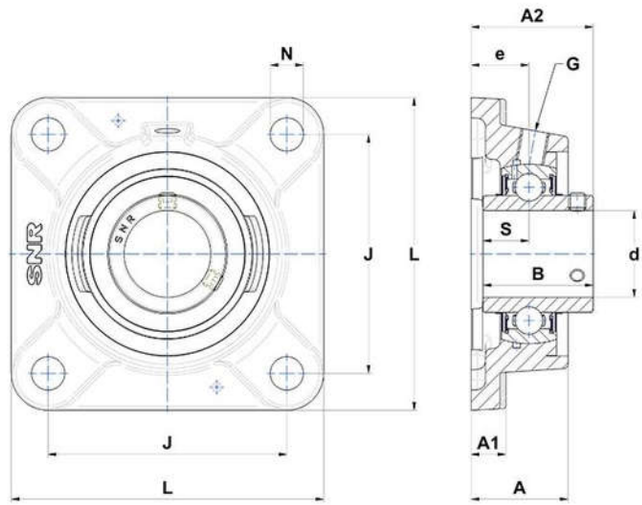

PRODUCT DEFINITION

Brand	SNR
A - Housing height	39,5 mm
A1 - Housing foot height / flange height	13 mm
A2 - Total height from mounting surface	54,2 mm
B - Width of Inner Ring	49,2 mm
d - Shaft diameter	40 mm

PRODUCT DEFINITION	
e - Distance mounting surface to bearing center	24 mm
G - Grease fitting	R1/8"
J - Mounting holes distance	101,5 mm
L - Housing width / diameter	130 mm
N - Mounting hole dimension	14 mm
S - Distance front side/bearing centre	19 mm

PRODUCT PERFORMANCE	
C - Dynamic load rating	29600000 mN
C0 - Static load rating	18200000 mN
Operating temperature min.	253,15 °K
Operating temperature max.	373,15 °K

OTHER FEATURES	
Mass	2,04 kg
Recommended tightening torque for set screw	11.5 N-m