E43381

Coupling plate for level sensors

LAUNCHING PLATE 3/4NPT

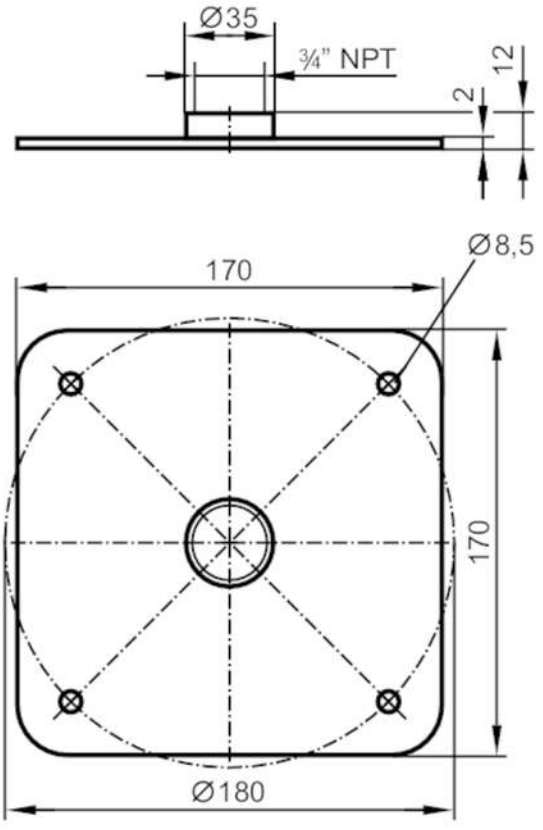

Application		
Design		for level sensors LR
Tank pressure	[bar]	-1...16
Mechanical data		
Weight	[g]	634.65
Materials		base plate: stainless steel (1.4571/316Ti); Adapter: stainless steel (1.4404 / 316L)
Tightening torque	[Nm]	6...9
Sensor connection		3/4" NPT
Remarks		
Pack quantity		1 pcs.