Brand of NTN corporation

Technical data

EXFLE207

Bearing units



Grey cast housing, radial insert ball bearing with eccentric locking collar, seal with slinger

KIT CONTENT

EX207G2, FLE207

VISUAL (S)

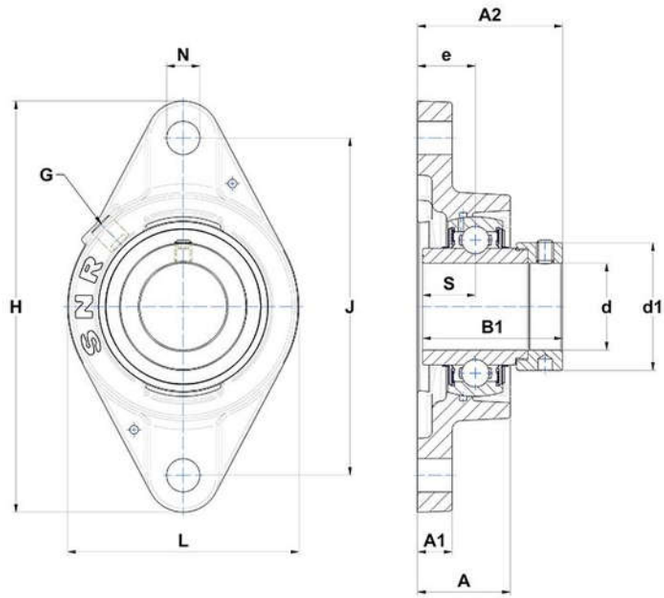

PRODUCT DEFINITION

Brand	SNR
A - Housing height	33,7 mm
A1 - Housing foot height / flange height	12,5 mm
A2 - Total height from mounting surface	53,3 mm
B - Width of Inner Ring	37,6 mm
B1 - Overall width Inner Ring	51,1 mm

PRODUCT DEFINITION	
d - Shaft diameter	35 mm
d1 - Outer dia of eccent. Lock. collar / nut of adapter sleeve	51,1 mm
e - Distance mounting surface to bearing center	21 mm
G - Grease fitting	R1/8"
H - Housing length, width or diameter	155 mm
J - Mounting holes distance	130 mm
L - Housing width / diameter	92 mm
N - Mounting hole dimension	14 mm
S - Distance front side/bearing centre	18,8 mm

PRODUCT PERFORMANCE	
C - Dynamic load rating	25700000 mN
C0 - Static load rating	15200000 mN
Operating temperature min.	253,15 °K
Operating temperature max.	373,15 °K

OTHER FEATURES	
Mass	1,3 kg
Recommended tightening torque for set screw	11.5 N-m