Bimetal thermometer, stainless steel version

Modelcode type: **A-R55**

Item number: **48792353**

Bimetal thermometer, stainless steel version	
Design	EN 13190
Model	R 5502, nominal size 100, location of stem radial
Accuracy class	class 1 per EN 13190
Scale range	0 °C ... 80 °C
Unit	°C
Connection design	4, compression fitting, sliding on stem
Process connection	1/2 NPT
Stem diameter	6 mm
Insertion length L1	110 mm
Materials	
Stem material	stainless steel
Movement	stainless steel
Dial	Aluminum, white
Pointer	aluminium, black
Case material	Stainless steel
Window	flat instrument glass
Damping	liquid damping
Operating conditions	
Inspection certificate 3.1 per EN 10204	
Certificate type	Inspection certificate acc. to DIN EN 10204 3.1
Certificate Language	English and French
Certificate for	thermometer mechanical
Certificates	Accuracy
Detailed Specification	Calibration values listed, 3 test points

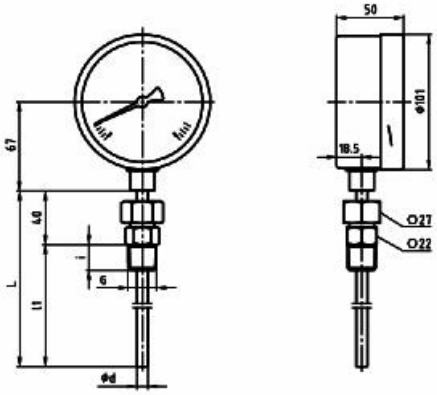

© Copyright by WIKA: Reproduction of this document is prohibited